■ 산업안전보건법 시행규칙 [별지 제10호의 6서식]

제 CE-2018-51177 호

안 전 인 증 서

(사업장명) 극동호이스트(주)

(소 재 지) 경기도 안산시 단원구 해봉로 119 (성곡동 630-2)

위 사업장에서 제조하는 아래의 품목이 『산업안전보건법』 제34조 및 같은 법 시행규칙 제58조의4제4항에 따른 안전인증 심사결과 안전·보건기준에 적합하므로 안전인증표시의 사용을 인증합니다.

품 목	호이스트
형식(용량)	KD2M-15T(15 ton)
인증번호	18-CE2AC-51177
인증기준	위험기계·기구 안전인증기준 (고용노동부고시 제2016-29호)
인증조건	산업안전보건법 "제34조 준수"

2018년 09월 18일

한국승강기안전공단 이사장

■ 산업안전보건법 시행규칙 [별지 제10호의 5서식]

심사결과 통지서

신청인	사업장명	극동호이스트(주)	사업장관리번호	13481013350
	사업자등록번호	134-81-01335	대표자 성명	최성찬
	소재지	경기도 안산시 단원구 해봉로 119 (성곡동 630-2)		

안전인증대상기계 · 기구명	호이스트		
형식(규격)	KDT-2M-5T-L8	용량(등급)	5 ton

『산업안전보건법』 제34조 및 같은 법 시행규칙 제58조의4제4항에 따라 실시한

[ ] 예비심사

[■] 서면심사

[ ] 기술능력 및 생산체계심사

[ ] 개별 제품심사

[ ] 형식별 제품심사

결과가 [■] 적 합 / [ ] 부적합 함을 통지합니다.

2018년 08월 23일

인증심사원 김성근 (서명 또는 인) 이동윤 (서명 또는 인)

한국승강기안전공단 이사장

크레인제작기준.안전기준 및 검사기준에 의한
전동 체인호이스트 서면심사

형식번호 : KD2M-15T

정격하중 : 15T

서면심사필
2013 .08. 23
한국승강기안전공단
CE180770017

극동호이스트 주식회사

(주소 : 경기도 안산시 단원구 해봉로 119, 반월공단 607B-14L)
(전화 : 031-491-5311/4, FAX : 031-363-3952)

심사필
KCS
한국승강기안전공단

불법복제 및 배포금지

동 일 형 식 일 람 표

사업장명	극동호이스트㈜	개정일자 및 번호			인증번호	
형식 및 모델		동일 형식 인정범위 및 내역				비 고
형식	모델	권상속도(m/min)	횡행속도(m/min)	양정(m)	횡행방식	
KD2M-15T	KD-2M-15T-L30	2.3 (m/min)	고속 : 12 (m/min) (inverter 2~12 m/min) 저속 : 6 (m/min) (inverter 1~6 m/min) DUAL : 12/6 (m/min)	30	Motor 구동식	횡행 INVERTER 방식 포함
	KDT-2M-15T-L30	2.3/0.6 (m/min)		30	Motor 구동식	횡행 INVERTER 방식 포함
	KD-2-15T-L30	2.3 (m/min)	-	30	정치식	
	KDT-2-15T-L30	2.3/0.6 (m/min)	-	30	정치식	

형식번호	KD2M-15T
모 델 명	KD-2M-15T-L30

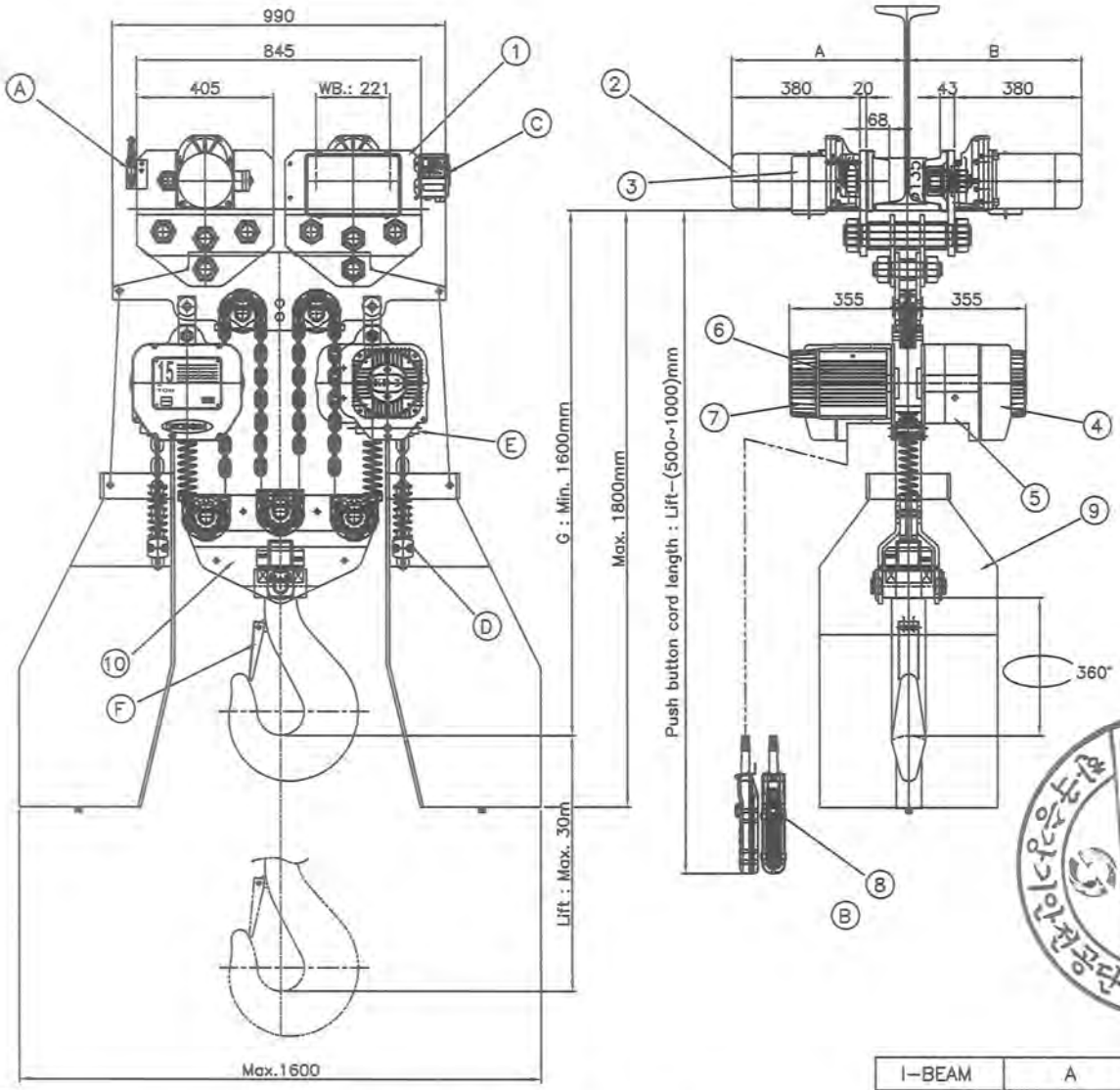

NO	DESCRIPTION	MATERIAL	Q'TY	SIZE	REMARK
1	KMT-ASS'Y	-	1		
2	Traversing Motor	-	1		
3	Traversing Box	-	1		
4	Control Panel	-	1		
5	Reducer-ASS'Y	-	1		
6	Motor	-	1		
7	Brake- ASS'Y	-	1		
8	Push Button S/W	-	1		
9	Chain Bucket	-	1		
10	Bottom Hook-ASS'Y	-	1		
	SAFETY DEVICE				
A	LIMIT S/W	-	2		
B	EMERGENCY STOP BUTTON S/W	-	1		
C	O.L.P	-	1		
D	CHAIN STOP HOLDER	-	1		
E	권과 방지 장치	-	1		
F	SAFETY LATCH	-	1		

CAPACITY			15 Ton
TEST LOAD			18.75 Ton
LIFT			Max. 30 m
HOISTING		MOTOR	2 x (3.3 kw x 4 poles)
		SPEED	2.3 m/min
TRAVER-SING	HIGH	MOTOR	2 x (1.5 kw x 4 poles)
		SPEED	12 m/min (INVERTER : 2~12m/min)
	LOW	MOTOR	2 x (0.6 kw x 8 poles)
		SPEED	6 m/min (INVERTER : 1~6 m/min)
	DUAL	MOTOR	2 x (1.5/0.75 kw x 4/8 poles)
		SPEED	12/6 m/min.
BRAKE SYSTEM	HOISTING		MECHANICAL BRAKE
			DC ELECTRO MAGNETIC BRAKE
	TRAVERSING		DC ELECTRO MAGNETIC BRAKE
POWER SOURCES	MAIN		AC 3ø 220/380/440 460/480V 60Hz
	CONTROL		AC 1ø 48/110/120V 60Hz
OPERATION METHOD			PUSH BUTTON SWITCH TYPE ON FL.
PAINT COLOR			0.4 PB 4.2/5.6
BEAM SIZE			150, 175, 190
LOAD CHAIN			ø11.2 x P34.3mm x 6fall
NET WEIGHT			Max. 1,320 kg

I-BEAM	A	B
150	500	500
175	512.5	512.5
190	520	520

* 옥외 사용 시 빗물로 부터 보호되게 사용해야 하며
방폭지역에서는 사용 불가

REV	DATE	DESCRIPTION	DRAWN	CHECK	APPRVD
A	05.AUG.2016	REDRAWING	K.H.Han	-	-

PROJECT

CLIENT

MANUFACTURER: 극동호이스트 주식회사 KUKDONG HOIST CO., LTD.

TITLE: ASSEMBLY DRAWING KD-2M-15T-L30

SCALE	DWG. NO	SHT. NO.	REV.
-	-		-

서면심사필 2019.09.23 한국승강기안전공단

POWER CIRCUIT

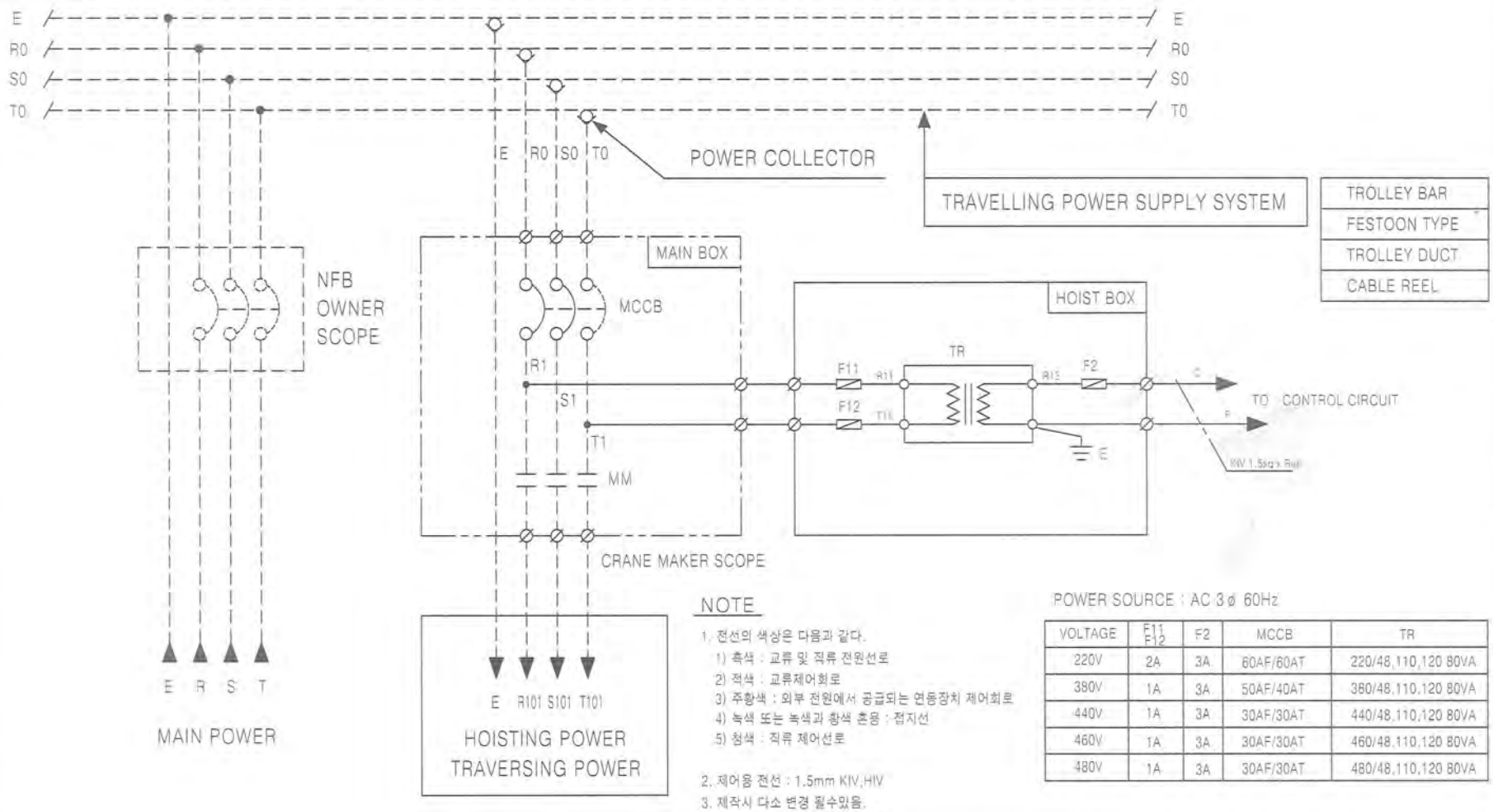

NOTE

1. 전선의 색상은 다음과 같다.
   1) 흑색 : 교류 및 직류 전원선로
   2) 적색 : 교류제어회로
   3) 주황색 : 외부 전원에서 공급되는 연동장치 제어회로
   4) 녹색 또는 녹색과 황색 혼용 : 접지선
   5) 청색 : 직류 제어선로
2. 제어용 전선 : 1.5mm KIV,HIV
3. 제작시 다소 변경 될수있음.
4. 외함 개방구조는 다음과 같을것.
   외함 개방후 충전되어있는 부분은 IP2X 이상의 직접 접촉 방호가 되어있을것.

POWER SOURCE : AC 3ø 60Hz

VOLTAGE	F11 F12	F2	MCCB	TR
220V	2A	3A	60AF/60AT	220/48,110,120 80VA
380V	1A	3A	50AF/40AT	380/48,110,120 80VA
440V	1A	3A	30AF/30AT	440/48,110,120 80VA
460V	1A	3A	30AF/30AT	460/48,110,120 80VA
480V	1A	3A	30AF/30AT	480/48,110,120 80VA

* TRAVELLING이 없을 시 MM은 HOIST MAKER SCOPE로 한다.

REV	DATE	DESCRIPTION	DRAWN	CHECK	APPRVD
A	05.AUG.2016	REDRAWING	K.H.Han		

TITLE: MAIN POWER CIRCUIT DIAGRAM

KD(T)-2M-15T

CUSTOMER

극동호이스트 주식회사
KUKDONG HOIST CO., LTD.

DESIGN	SCALE	SHT. NO.	ORDER NO.

DWG NO.

81

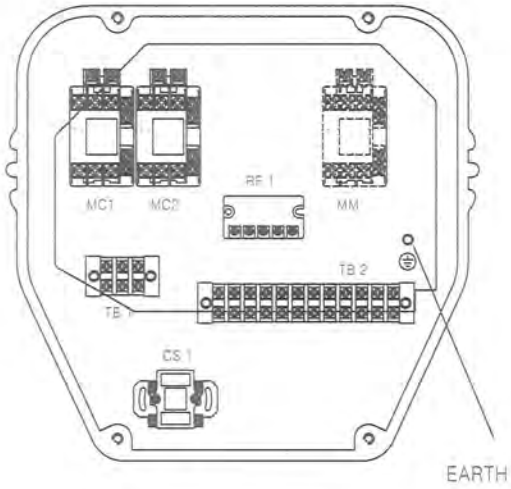

HOIST CONTROL PANEL 1

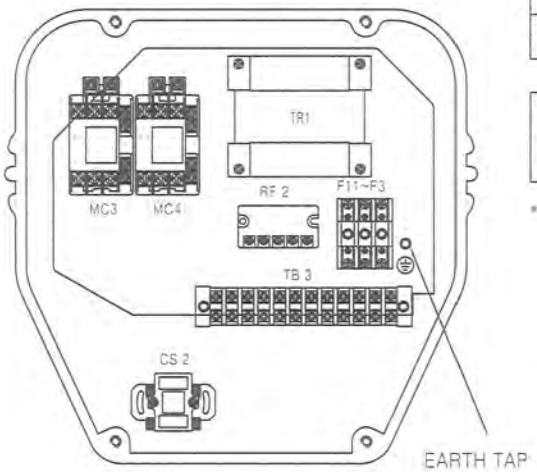

HOIST CONTROL PANEL 2

SYMBOL	NAME	SPEC	MAKER	Q'ty
MC1,2,3,4	HOISTING MAGNETIC CONTACTOR	DMC22b	DONG A	4
CS1,2	CAM SWITCH	HY-SQ5-SH-GP1련	HAN YOUNG	2
RF1,2	RECTIFIER	SR-30	KUK DONG	2
TB1	TERMINAL BLOCK	50A x 3P(220V)	HAN YOUNG	1
		[illegible]		
TB2,3	TERMINAL BLOCK	20A x 12P	HAN YOUNG	2
TR1	TRANSFORMER	80VA	SHIN HAN CORE	1
F11,F12	FUSE(220V)	2A	–	2
	FUSE(380,440,460,480V)	1A	–	2
F2	FUSE	3A	–	1

MM	MAIN MAGNETIC CONTACTOR	220V : DMC48b	DONG A	1
		380,440,460,480V : DMC32b		

* MM은 TRAVELLING 미적용시에만 포함

REV	DATE	DESCRIPTION	DRAWN	CHECK	APPRVD
1	05.AUG.2016	REDRAWING	K.H.Han	–	–

TITLE: HOIST CONTROL PANEL (SINGLE)

KD2M-15T

CUSTOMER

극동호이스트 주식회사
KUKDONG HOIST CO., LTD.

DESIGN	SCALE	SHT. NO.	ORDER NO.

DWG. NO.

84

POWER CIRCUIT

HOISTING MOTION

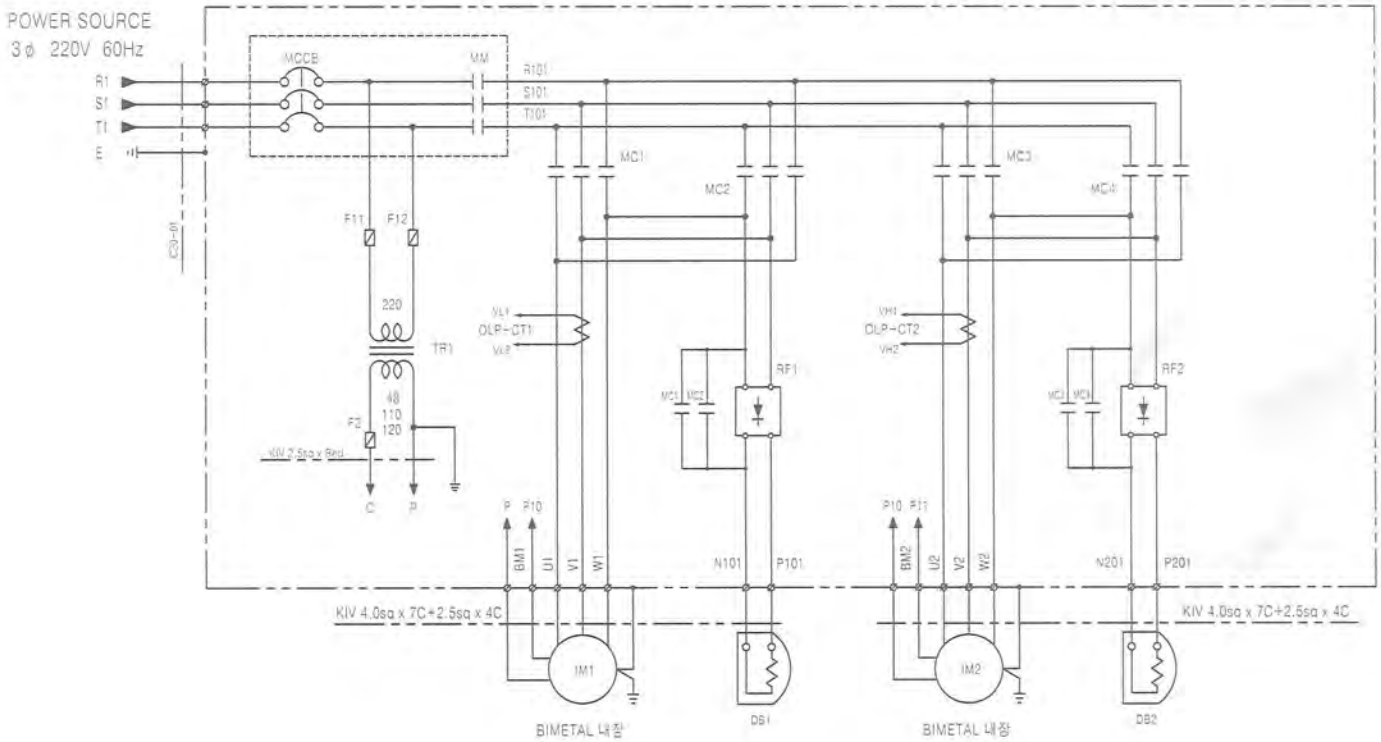

[ ] : OWNER SCOPE

* TRAVELLING 미적용시 MM은 HOIST MAKER SCOPE

SPECIFICATION	HOISTING POWER	HOISTING MOTOR	DC MAG. BRAKE	NO FUSE BREAKER	TRANSFORMER	FUSE		MAIN MAGNETIC CONTACTOR	MAGNETIC CONTACTOR		HALF WAVE RECTIFIER	LOAD LIMITER	CABLE
SYMBOL	HOIST	IM1,2	DB1,2	MCCB	TR1	F11, 12	F2	MM	MC1,2	MC3,4	RF1,2	OLP	C20-01
	15TON AC 3ø 220V 60Hz	3.3kw x 4P	DC 90V	ABS-63c/60AT	220-48/110/120V 100VA	2A	3A	DMC48b	DMC22b	DMC22b	SR-30	JDLS-70	VCT 10sq x 4C
MAKER	KUK DONG HOIST			LS	SHIN HAN CORE	-		DONG-A			KUK DONG HOIST	JUNG HO	SEOUL

REV	DATE	DESCRIPTION	DRAWN	CHECK	APPRVD
A	05.AUG.2016	REDRAWING	K.H.Han	-	-

TITLE

HOISTING POWER CIRCUIT DIAGRAM

KD2M-15T

CUSTOMER

극동호이스트 주식회사
KUKDONG HOIST CO., LTD.

DESIGN	SCALE	SHT. NO.	ORDER NO.

DWG. NO.

KD2M-15E001

85

POWER CIRCUIT

HOISTING MOTION

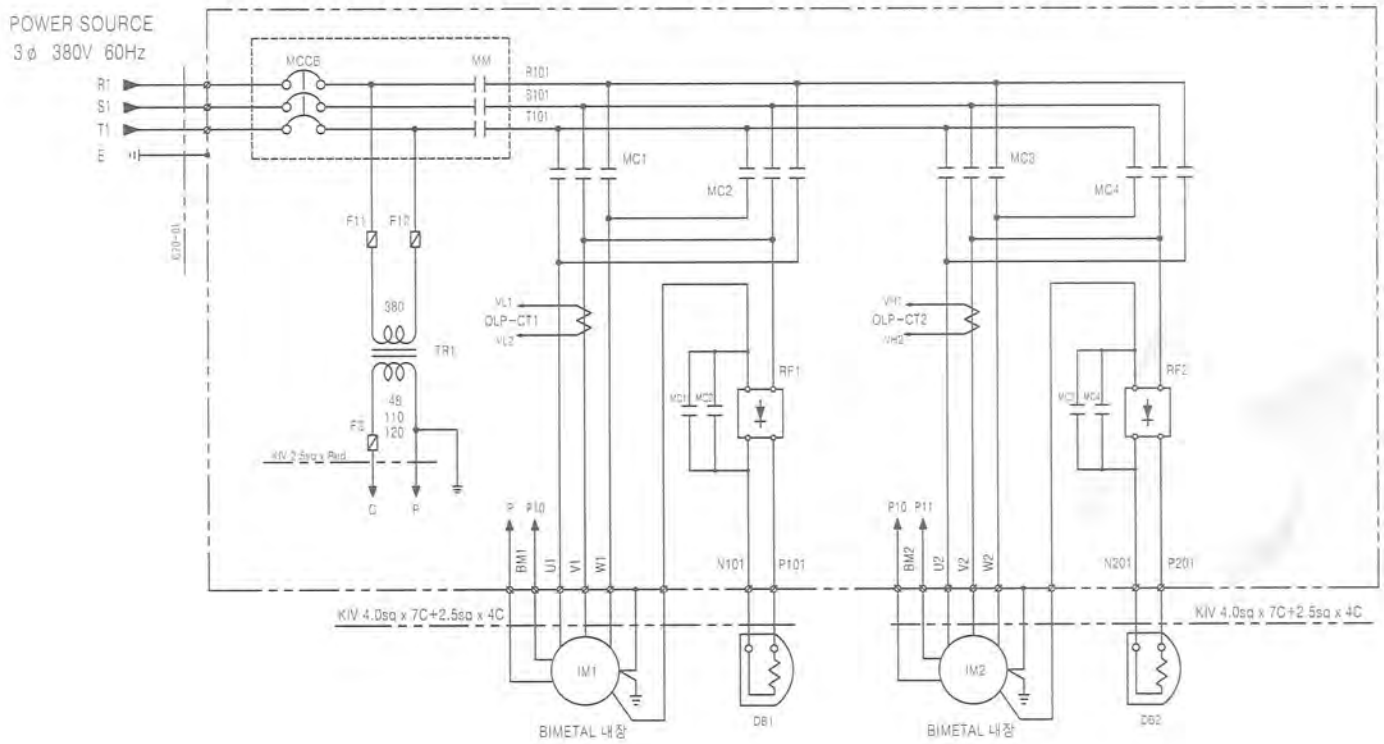

: OWNER SCOPE

* TRAVELLING 미적용시 MM은 HOIST MAKER SCOPE

SPECIFICATION	HOISTING POWER	HOISTING MOTOR	DC MAG. BRAKE	NO FUSE BREAKER	TRANSFORMER	FUSE		MAN MAGNETIC CONTACTOR	MAGNETIC CONTACTOR		HALF WAVE RECTIFIER	LOAD LIMITER	CABLE
SYMBOL	HOIST	IM1,2	DB1,2	MCCB	TR1	F11, 12	F2	MM	MC1,3	MC3,4	RF1,2	OLP	C20-01
	15TON AC 3ø 380V 60Hz	3.3kw x 4P	DC 90V	ABS-53c/40AT	380-48/110/120V, 60VA	1A	3A	DMC32b	DMC22b	DMC22b	SR-30	JDLS-70	VCT 4.0sq x 4C
MAKER	KUK DONG HOIST			LS	SHIN HAN CORE	-		DONG-A			KUK DONG HOIST	JUNG HO	SEOUL

REV	DATE	DESCRIPTION	DRAWN	CHECK	APPRVD
A	05.AUG.2016	REDRAWING	K.H.Han	-	-

TITLE

HOISTING POWER CIRCUIT DIAGRAM

KD2M-15T

CUSTOMER

극동호이스트 주식회사
KUKDONG HOIST CO., LTD.

DESIGN	SCALE	SHT. NO.	ORDER NO.

DWG. NO.

KD2M-15E002

88

POWER CIRCUIT

HOISTING MOTION

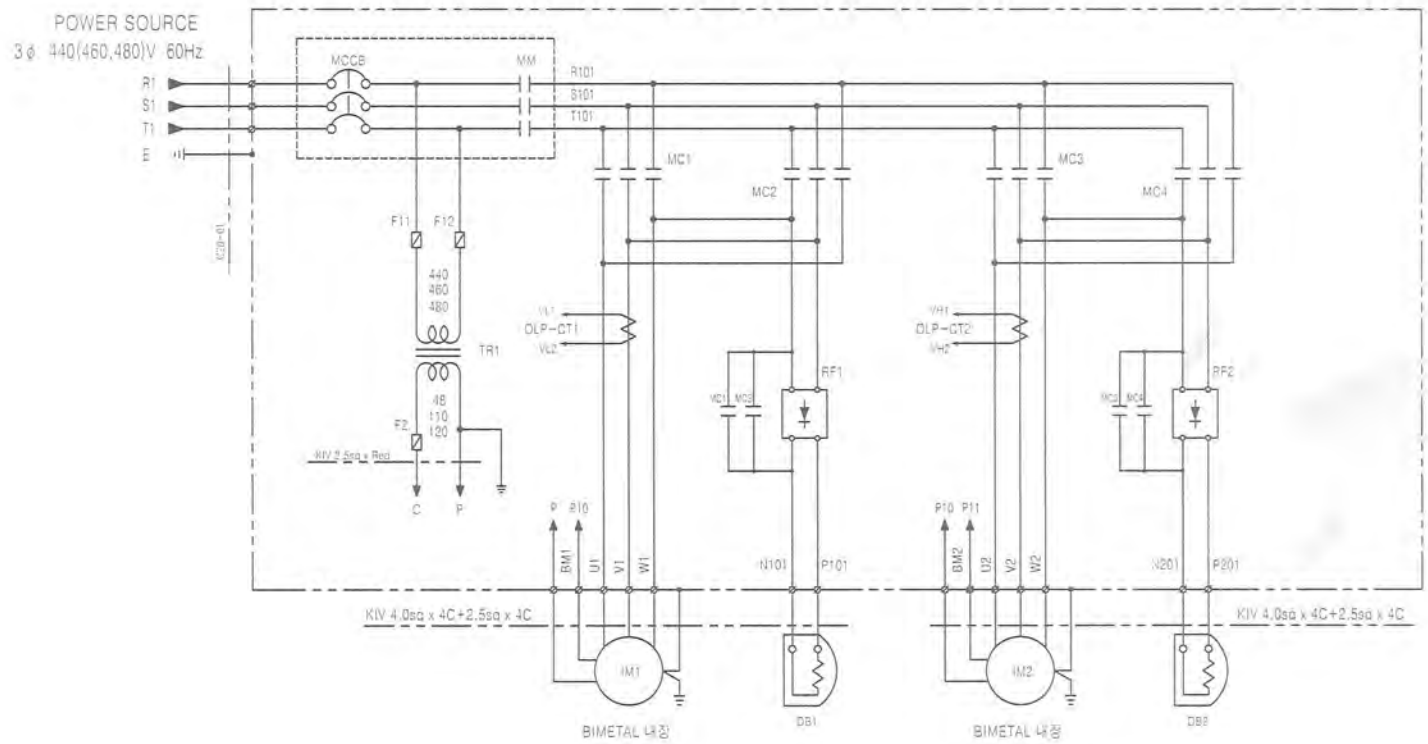

[ ] : OWNER SCOPE

* TRAVELLING 미적용시 MM은 HOIST MAKER SCOPE

SPECIFICATION	HOISTING POWER	HOISTING MOTOR	DC MAG. BRAKE	NO FUSE BREAKER	TRANSFORMER	FUSE		MIN MAGNETIC CONTACTOR	MAGNETIC CONTACTOR		HALF WAVE RECTIFIER	LOAD LIMITER	CABLE
SYMBOL	HOIST	IM1,2	DB1,2	MCCB	TR1	F11, 12	F2	MM	MC1,2	MC3,4	RF1,2	OLP	C20-01
	15TON AC 3ϕ 440,460,480V 60Hz	3.3kw x 4P	DC 180/205V	ABE-33b/30AT	440,460,480-48/110/120V, 80VA	1A	3A	DMC32b	DMC22b	DMC22b	SR-30	JDLS-70	VCT 4sq x 4C
MAKER	KUK DONG HOIST			LS	SHIN HAN CORE	-		CONG-A			KUK DONG HOIST	JUNG HO	SEOUL

REV	DATE	DESCRIPTION	DRAWN	CHECK	APPRVD
A	05.AUG.2016	REDRAWING	K.H.Han	-	-

TITLE

HOISTING POWER CIRCUIT DIAGRAM

KD2M-15T

CUSTOMER

극동호이스트 주식회사
KUKDONG HOIST CO., LTD.

DESIGN	SCALE	SHT. NO.	ORDER NO.

DWG. NO.

KD2M-15E003

87

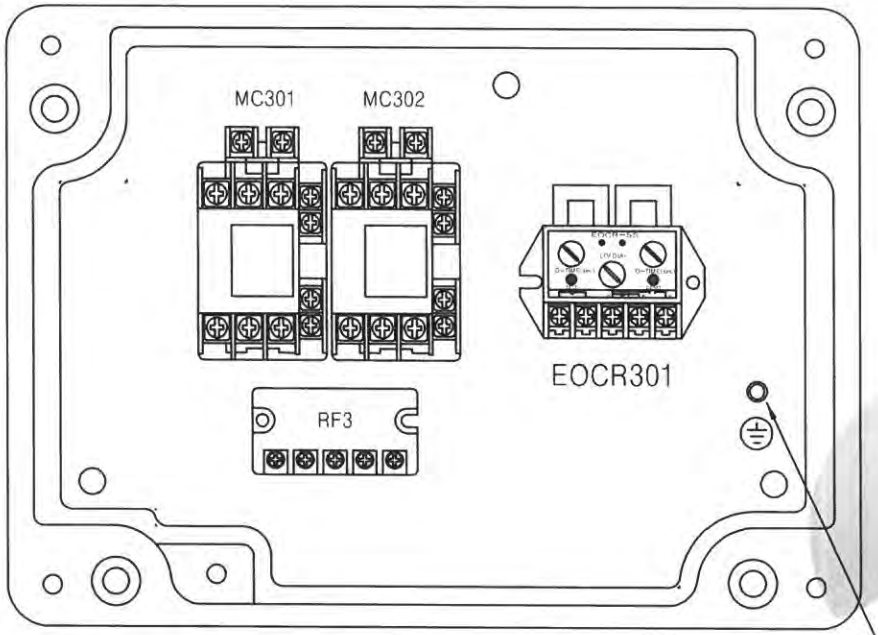

SYMBOL	NAME	SPEC	MAKER	Q'ty
MC301,302	TRAVERSING MAGNETIC CONTACTOR	DMC22b	DONG A	2
RF3	RECTIFIER	SR-30	KUK DONG	1

REV	DATE	DESCRIPTION	DRAWN	CHECK	APPRVD
A	05.AUG.2016	REDRAWING	K.H.Han	-	-

TITLE
TRAVERSING PANEL LAYOUT (SINGLE)
KD2M-15T

CUSTOMER

극동호이스트 주식회사
KUKDONG HOIST CO., LTD.

DESIGN	SCALE	SHT. NO.	ORDER NO.

DWG. NO.

한국승강기안전공단

POWER CIRCUIT

HOISTING MOTION | TRAVERSING MOTION

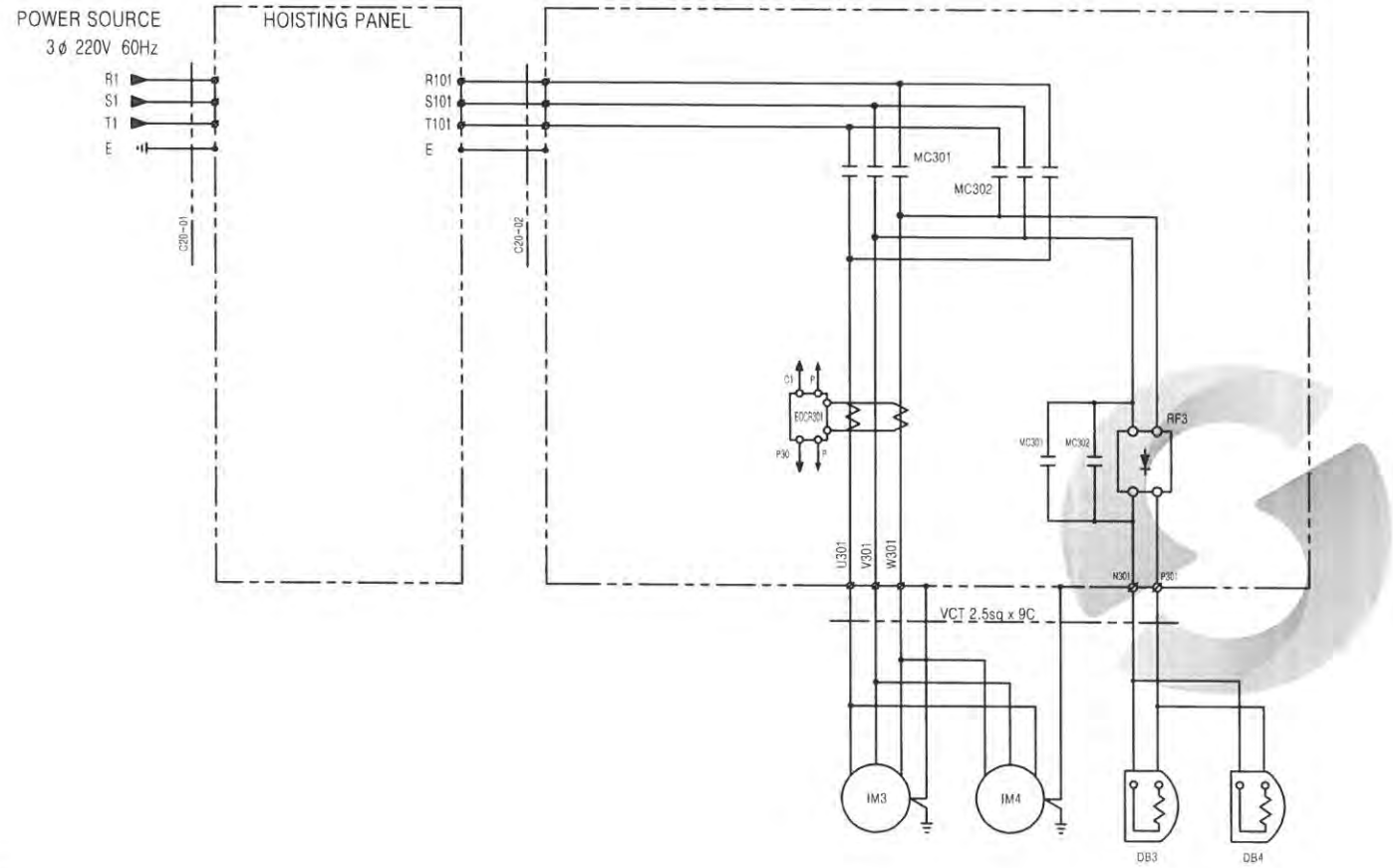

: OWNER SCOPE

SPECIFICATION	HOISTING POWER	TRAVERSING MOTOR	DC MAG. BRAKE	MAGNETIC CONTACTOR	ELEC.OVER CURRENT RELAY	HALF WAVE RECTIFIER	CABLE
SYMBOL	HOIST	IM3,4	DB3,4	MC301,302	EOCR301	RF3	C20-02
	15TON AC 3ϕ 220V 60Hz	1.5kw x 4P (0.6kw x 8P)	DC 100V	DMC22b	SS-30	SR-30	VCT 4sq x 4C
MAKER	KUK DONG HOIST			DONG-A	SAMHWA	KUK DONG HOIST	SEOUL

REV	DATE	DESCRIPTION	DRAWN	CHECK	APPRVD
A	05.AUG.2016	REDRAWING	K.H.Han	-	-

TITLE
TRAVERSING POWER CIRCUIT DIAGRAM
KD2M-15T

CUSTOMER

극동호이스트 주식회사
KUKDONG HOIST CO., LTD.

DESIGN	SCALE	SHT. NO.	ORDER NO.

DWG. NO.
KD2M-15ET01

89.

POWER CIRCUIT

HOISTING MOTION | TRAVERSING MOTION

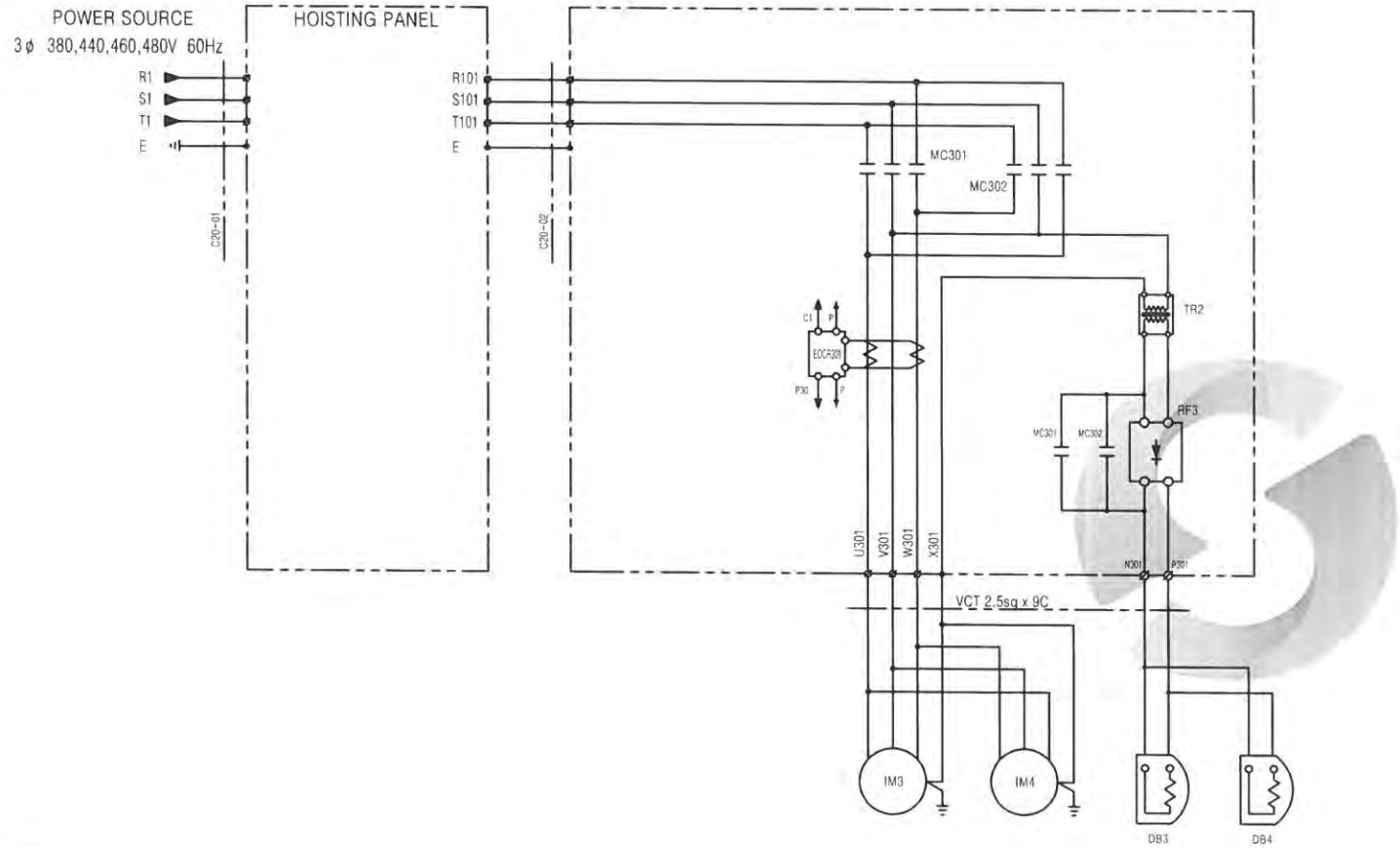

[ ] : OWNER SCOPE

SPECIFICATION	HOISTING POWER	TRAVERSING MOTOR	DC MAG. BRAKE	TRANSFORMER	MAGNETIC CONTACTOR	ELEC.OVER CURRENT RELAY	HALF WAVE RECTIFIER	CABLE
SYMBOL	HOIST	IM3.4	DB3.4	TR2	MC301.302	EOCR301	RF3	C20-02
	15TON AC 3ϕ 380,440,460,480V 60Hz	1.5kw x 4P (0.6kw x 8P)	DC 100V	380/440/460/480-220V, 300VA	DMC22b	SS-30	SR-30	VCT 2.5sq x 4C
MAKER	KUK DONG HOIST			SHIN HAN CORE	DONG-A	SAMHWA	KUK DONG HOIST	SEOUL

REV	DATE	DESCRIPTION	DRAWN	CHECK	APPRVD
A	05.AUG.2016	REDRAWING	K.H.Han	-	-

TITLE
TRAVERSING POWER CIRCUIT DIAGRAM
KD2M-15T

CUSTOMER

극동호이스트 주식회사
KUKDONG HOIST CO., LTD.

DESIGN	SCALE	SHT. NO.	ORDER NO.

DWG. NO.
KD2M-15ET02

90

CONTROL CIRCUIT

OVER LOAD PROTECTOR	E-STOP	UP	DOWN	2nd UP	2nd DOWN	EAST	WEST

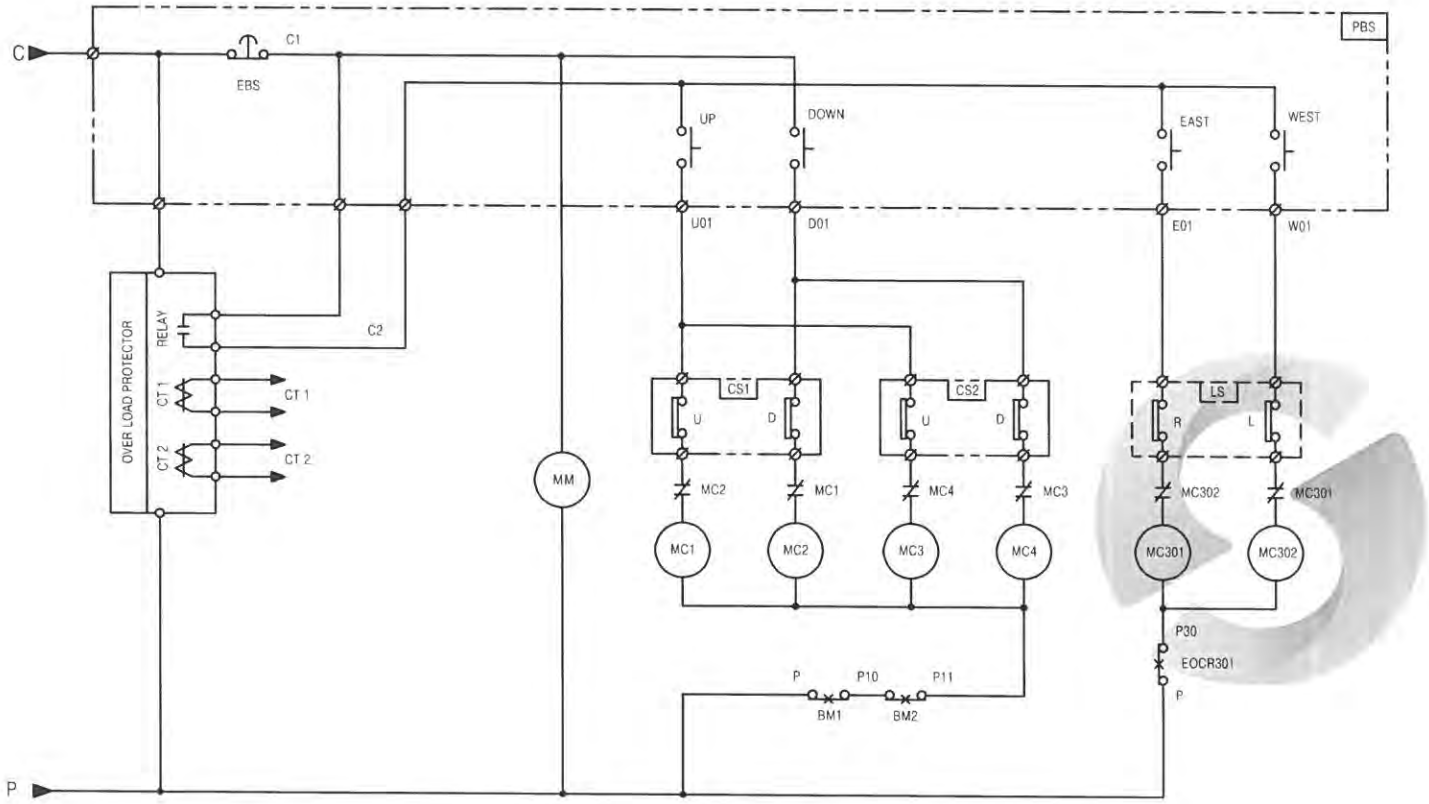

: OWNER SCOPE

SPECIFICATION	BIMETAL	CAM SWITCH	PENDANT P.B.S/W	LOAD LIMITER	LIMIT SWITCH
SYMBOL	BM1,2	CS1,2	E.S.B	OLP 1	LS
	130° C	HY-SQ5-GP1	250V 3A	JDLS-70	KG-L001
MAKER	–	HAN YOUNG		JUNG HO	KG-AUTO

REV	DATE	DESCRIPTION	DRAWN	CHECK	APPRVD
A	05.AUG.2016	REDRAWING	K.H.Han	-	-

TITLE: CONTROL CIRCUIT DIAGRAM

KD-2M-15T

CUSTOMER

극동호이스트 주식회사
KUKDONG HOIST CO., LTD.

DESIGN	SCALE	SHT. NO.	ORDER NO.

DWG. NO. KD2M15E012

91.

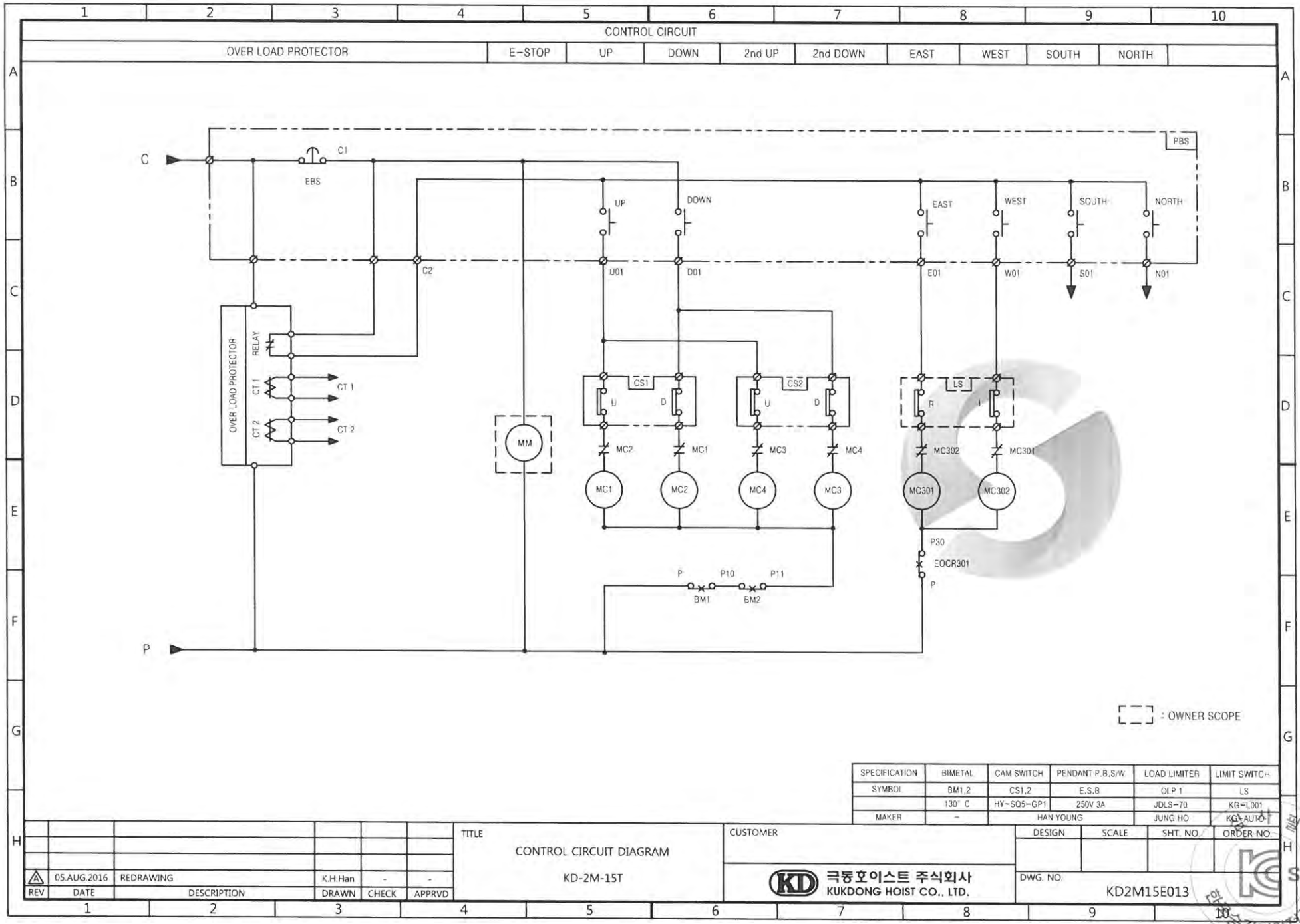

SPECIFICATION	BIMETAL	CAM SWITCH	PENDANT P.B.S/W	LOAD LIMITER	LIMIT SWITCH
SYMBOL	BM1,2	CS1,2	E.S.B	OLP 1	LS
	130° C	HY-SQ5-GP1	250V 3A	JDLS-70	KG-L001
MAKER	-	HAN YOUNG		JUNG HO	KG-AUTO

REV	DATE	DESCRIPTION	DRAWN	CHECK	APPRVD
A	05.AUG.2016	REDRAWING	K.H.Han	-	-

TITLE
CONTROL CIRCUIT DIAGRAM
KD-2M-15T

CUSTOMER

극동호이스트 주식회사
KUKDONG HOIST CO., LTD.

DESIGN	SCALE	SHT. NO.	ORDER NO.

DWG. NO.
KD2M15E013

92.

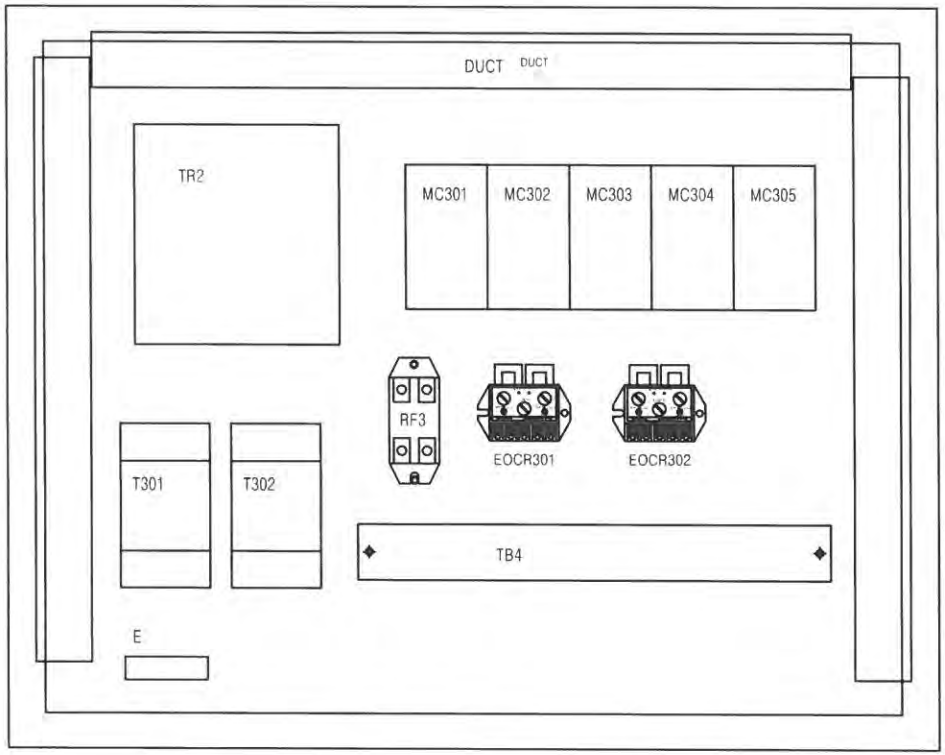

SYMBOL	NAME	SPEC	Q'ty
TR2	TRANS	380/440/460/480V-220V 300VA	1
MC301,302,303,304,305	MAGNETIC CONTACTOR	DMC12b	5
T301,302	TIMER	T48N-E10A	2
RF3	RECTIFIER	SR-30	1
TB4	TERMINAL BLOCK	20A x 12P	1
DUCT	CABLE DUCT	60x30	1
E	EARTH BUS BAR	PUR	1

REV	DATE	DESCRIPTION	DRAWN	CHECK	APPRVD
A	05.AUG.2016	REDRAWING	K.H.Han	-	-

TITLE
TRAVERSING PANEL LAYOUT (DUAL)
KD2M-15T

CUSTOMER

극동호이스트 주식회사
KUKDONG HOIST CO., LTD.

DESIGN	SCALE	SHT. NO.	ORDER NO.

DWG. NO.

POWER CIRCUIT

HOISTING MOTION | TRAVERSING MOTION

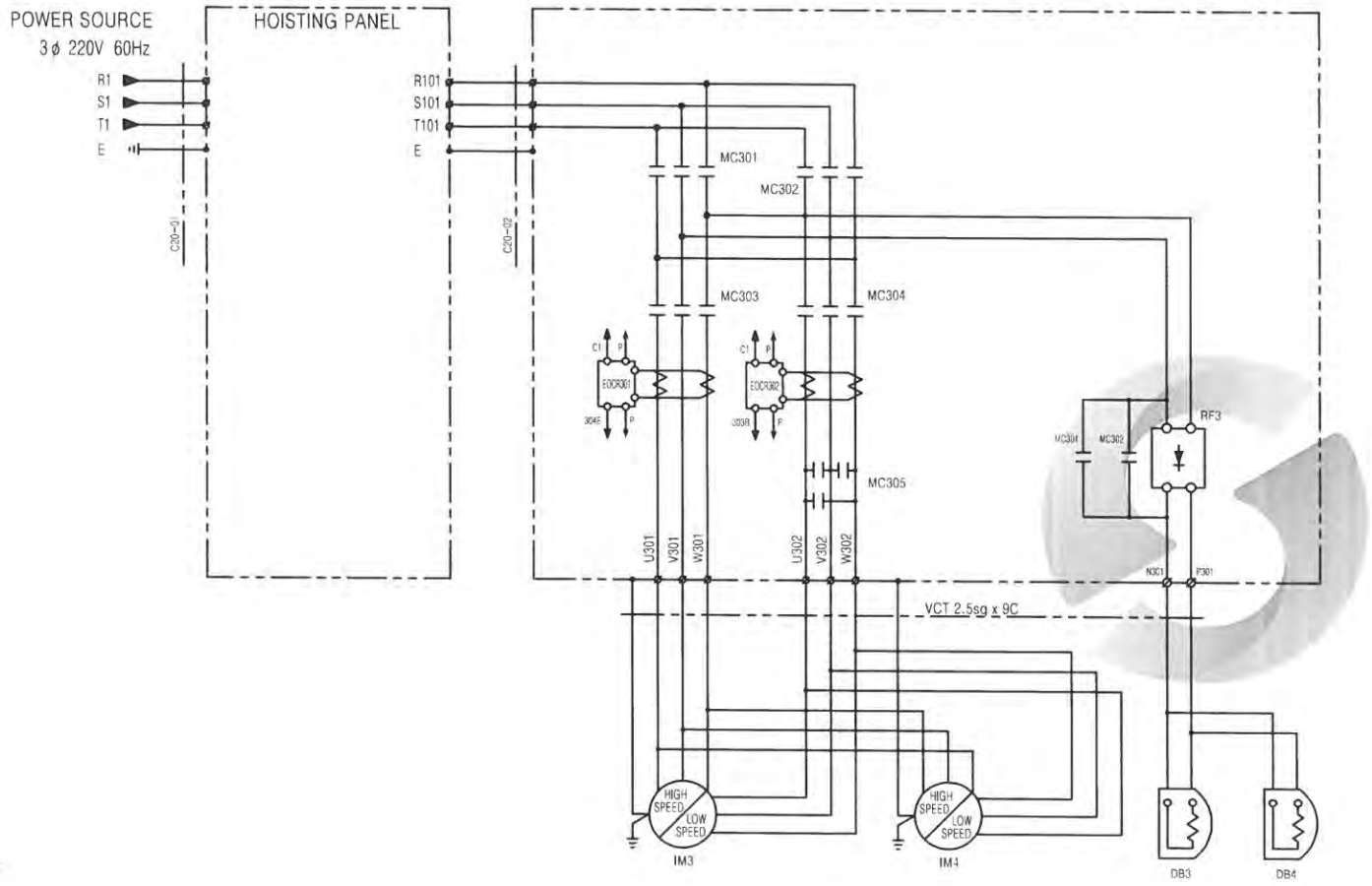

[ ] : OWNER SCOPE

SPECIFICATION	HOISTING POWER	TRAVERSING MOTOR	DC MAG. BRAKE	MAGNETIC CONTACTOR	ELEC.OVER CURRENT RELAY		HALF WAVE RECTIFIER	CABLE
SYMBOL	HOIST	IM3,4	DB3,4	MC301,302,303,304,305	EOCR301	EOCR302	RF3	C20-02
	15TON AC 3ϕ 220V 60Hz	1.5/0.75kw x 4/BP	DC 100V	DMC22b	SS-30	SS-05	SR-30	VCT 4sq x 4C
MAKER	KUK DONG HOIST			DONG-A	SAMHWA		KUK DONG HOIST	SECOUL

REV	DATE	DESCRIPTION	DRAWN	CHECK	APPRVD
A	05.AUG.2016	REDRAWING	K.H.Han	-	-

TITLE
TRAVERSING POWER CIRCUIT DIAGRAM
KD2M-15T

CUSTOMER

극동호이스트 주식회사
KUKDONG HOIST CO., LTD.

DESIGN	SCALE	SHT. NO.	ORDER NO.

DWG. NO.
KD2M-15ET03

94.

POWER CIRCUIT

HOISTING MOTION | TRAVERSING MOTION

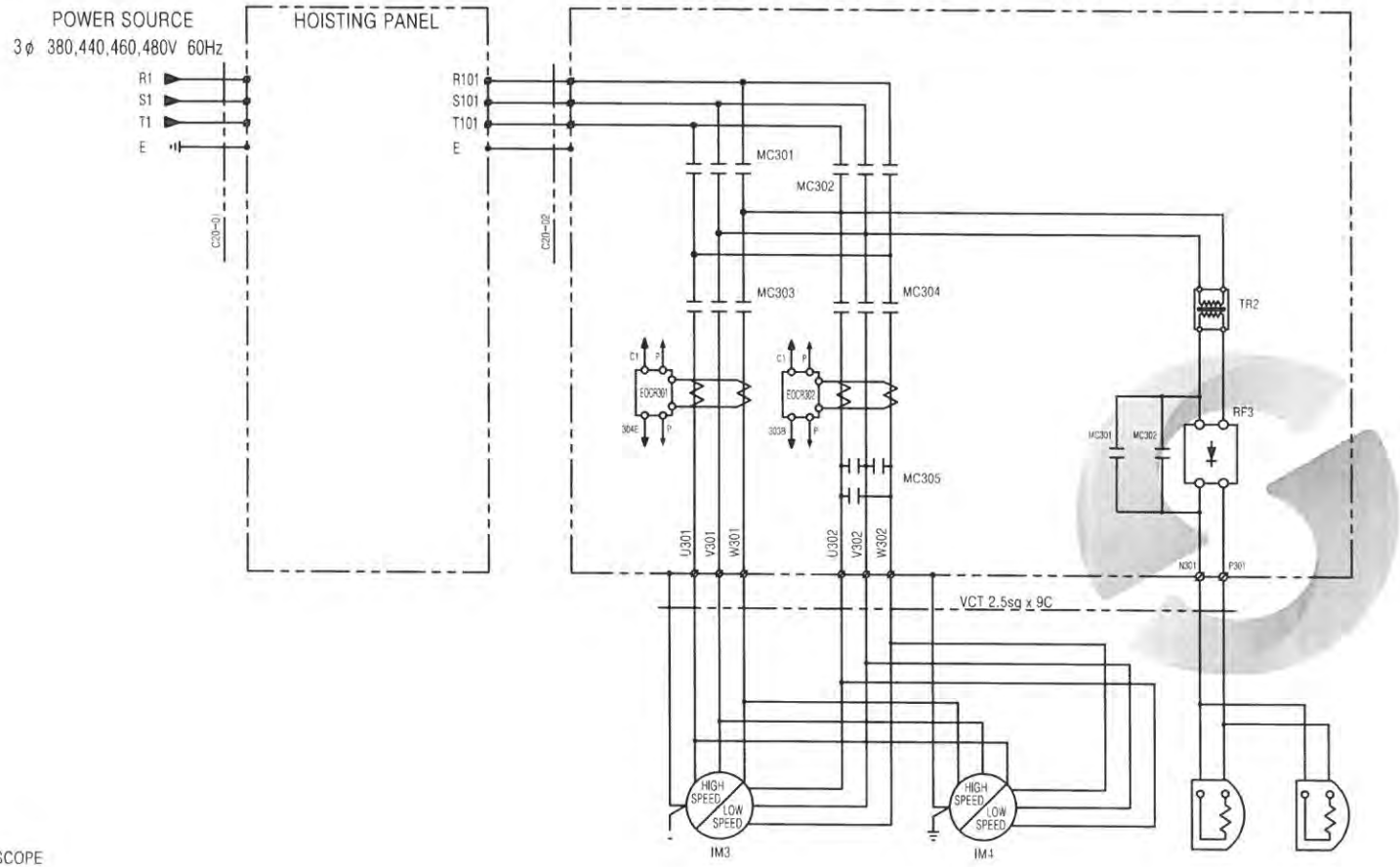

: OWNER SCOPE

SPECIFICATION	HOISTING POWER	TRAVERSING MOTOR	DC MAG. BRAKE	TRANSFORMER	MAGNETIC CONTACTOR	ELEC.OVER CURRENT RELAY		HALF WAVE RECTIFIER	CABLE
SYMBOL	HOIST	IM3,4	DB3,4	TR2	MC301,302,303,304,305	EOCR301	EOCR302	RF3	C20-02
	15TON AC 3ϕ 380,440,460,480V 60Hz	1.5/0.75kw x 4/8P	DC 100V	380/440/460/480-220V, 300VA	DMC22b	SS-30	SS-05	SR-30	VCT 2.5sq x 4C
MAKER	KUK DONG HOIST			SHIN HAN CORE	DONG-A	SAMHWA		KUK DONG HOIST	SEOUL

REV	DATE	DESCRIPTION	DRAWN	CHECK	APPRVD
A	05.AUG.2016	REDRAWING	K.H.Han	-	-

TITLE
TRAVERSING POWER CIRCUIT DIAGRAM
KD2M-15T

CUSTOMER

극동호이스트 주식회사
KUKDONG HOIST CO., LTD.

DESIGN	SCALE	SHT. NO.	ORDER NO.

DWG. NO.
KD2M-15ET04

95

CONTROL CIRCUIT

EM. STOP & OVER LOAD PROTECTOR	UP	DOWN	2nd UP	2nd DOWN	EAST	WEST	T/S 2nd

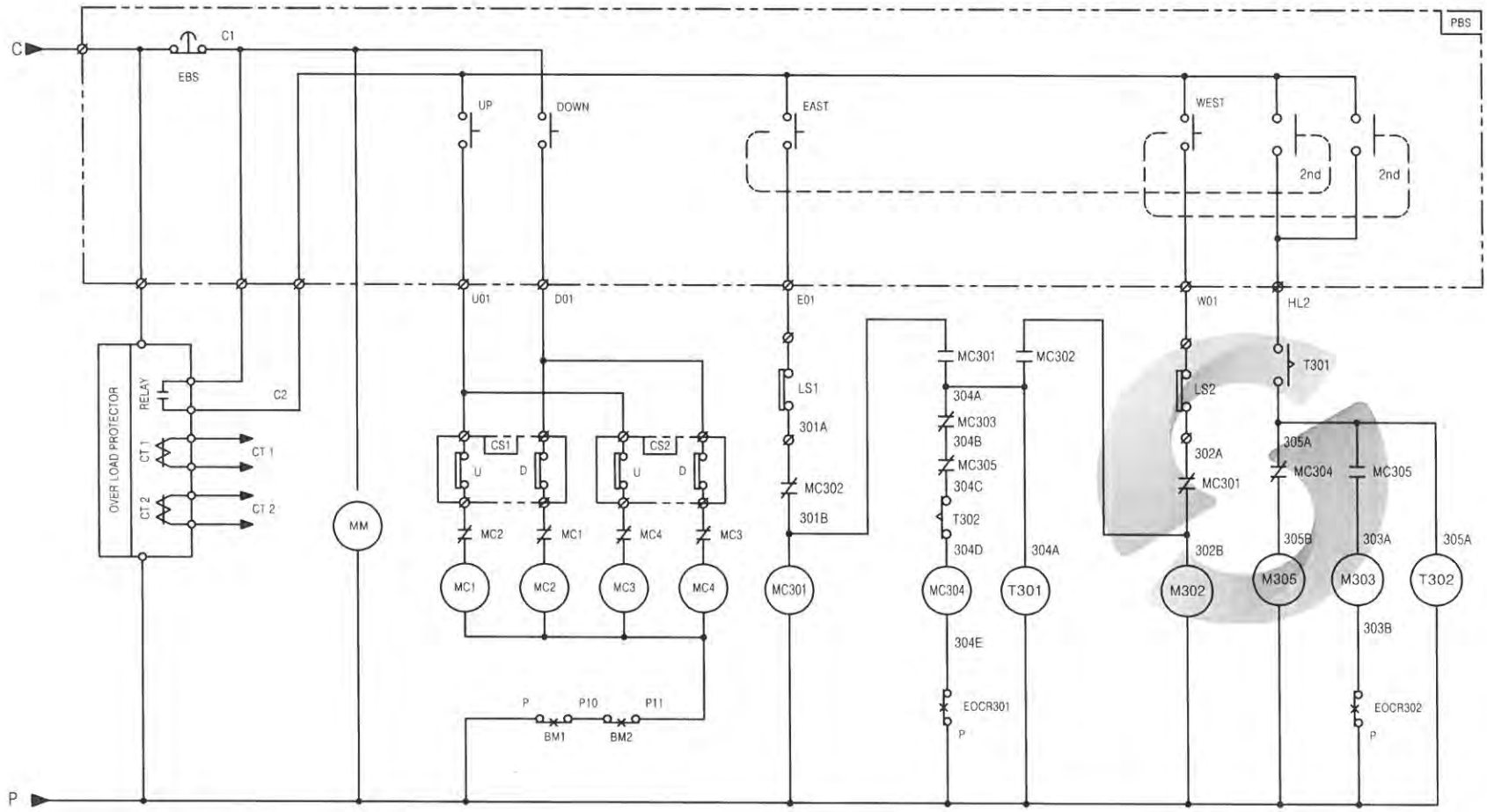

: OWNER SCOPE

SPECIFICATION	BIMETAL	CAM SWITCH	PENDANT P.B.S/W	TIMER	LOAD LIMITER	LIMIT SWITCH
SYMBOL	BM1,2	CS1,2	E.S.B	T301,302	OLP 1	LS1,2
	130° C	HY-SQ5-GP1	250V 3A	T48N-E10A	JDLS-70	KG-L001
MAKER	-	HAN YOUNG		HAN YOUNG	JUNG HO	KG-AUTO

REV	DATE	DESCRIPTION	DRAWN	CHECK	APPRVD
A	05.AUG.2016	REDRAWING	K.H.Han	-	-

TITLE

CONTROL CIRCUIT DIAGRAM

KD-2M-15T

CUSTOMER

극동호이스트 주식회사
KUKDONG HOIST CO., LTD.

DESIGN	SCALE	SHT. NO.	ORDER NO.

DWG. NO.

KD2M15E014

96

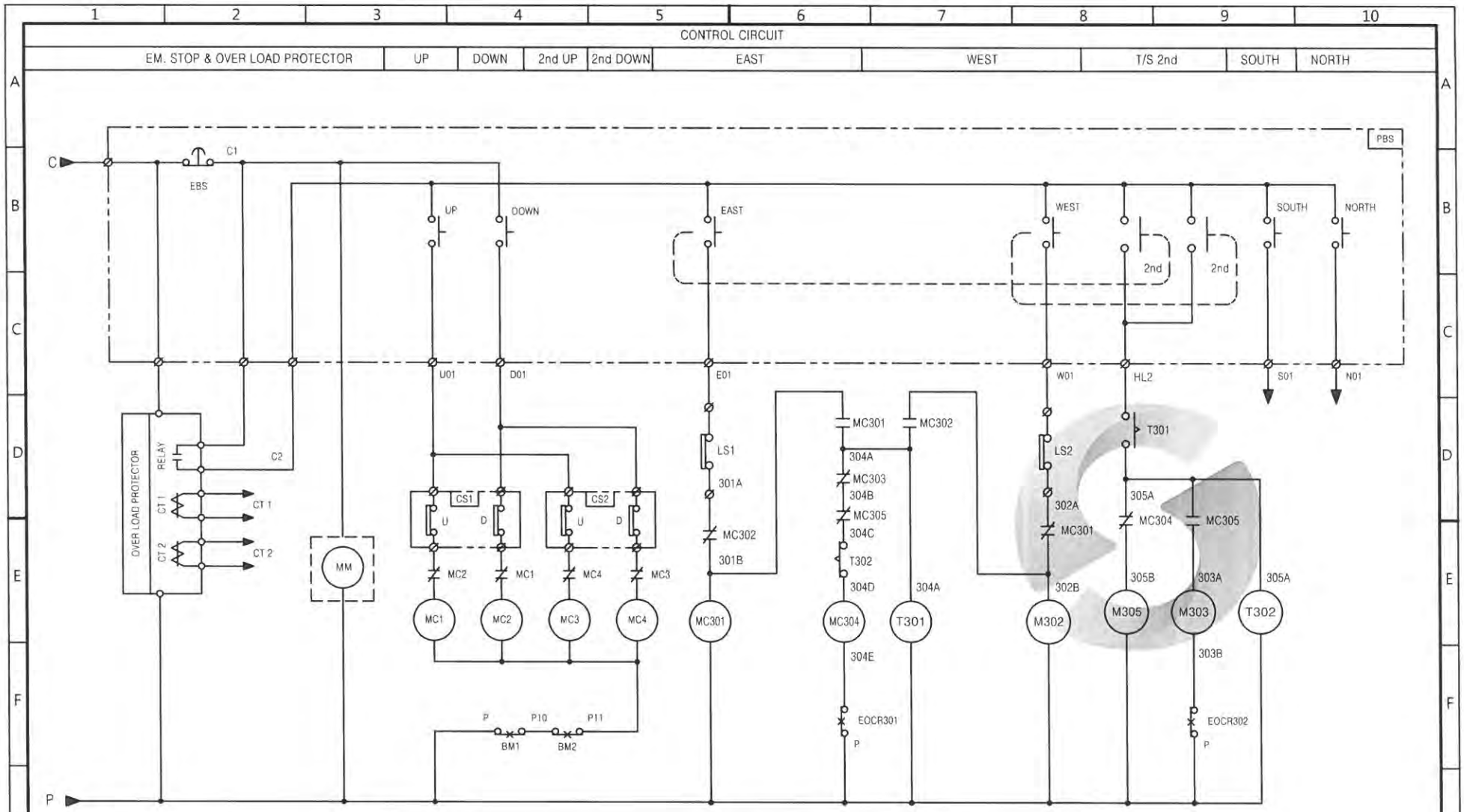

: OWNER SCOPE

SPECIFICATION	BIMETAL	CAM SWITCH	PENDANT P.B.S/W	TIMER	LOAD LIMITER	LIMIT SWITCH
SYMBOL	BM1,2	CS1,2	E.S.B	T301,302	OLP 1	LS1,2
	130° C	HY-SQ5-GP1	250V 3A	T48N-E10A	JDLS-70	KG-L001
MAKER	–	HAN YOUNG		HAN YOUNG	JUNG HO	KG-AUTO

REV	DATE	DESCRIPTION	DRAWN	CHECK	APPRVD
A	05.AUG.2016	REDRAWING	K.H.Han	-	-

TITLE

CONTROL CIRCUIT DIAGRAM

KD-2M-15T

CUSTOMER

극동호이스트 주식회사
KUKDONG HOIST CO., LTD.

DESIGN	SCALE	SHT. NO.	ORDER NO.

DWG. NO.

KD2M15E015

91.

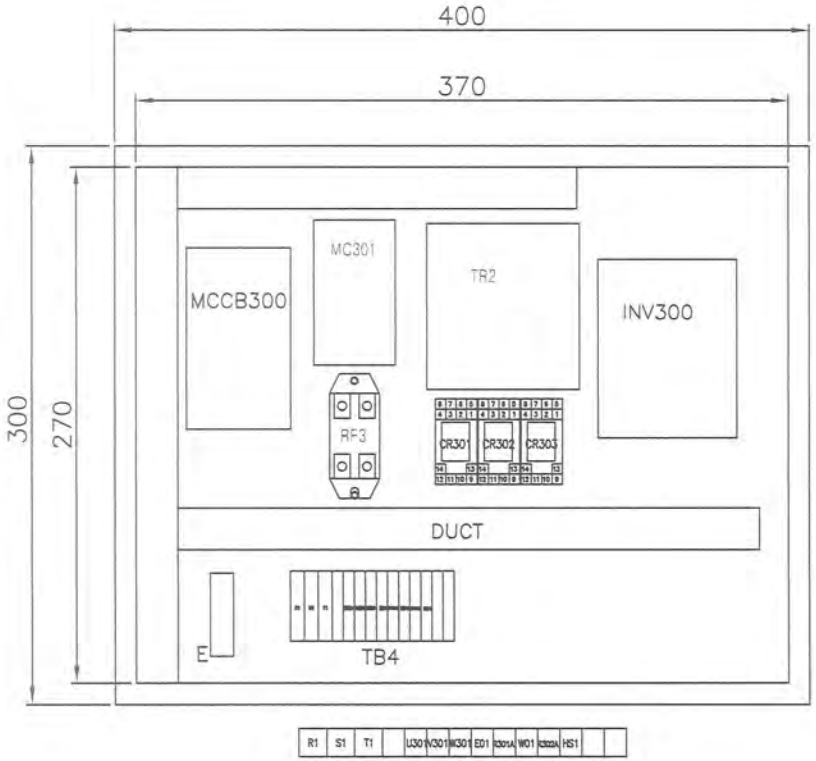

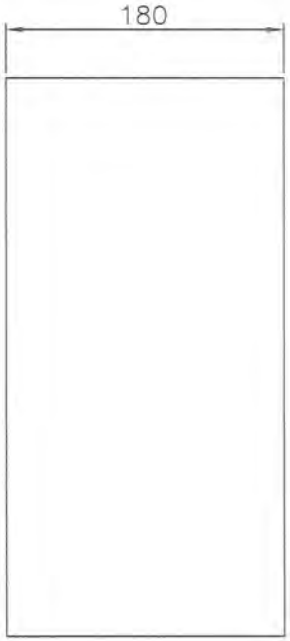

NO.	SYMBOL	DESCRIPTION	MT'L	QT'T
1	-	T/S BOX	PUR	1
2	-	측판	SS400	1
3	MCCB300	MCCB	PUR	1
4	MC301	MAGNETIC CONTECTOR	PUR	1
5	CR301,302,303	RELAY & SOCKET	PUR	1
6	INV300	INVERTER	PUR	1
7	TB4	TERMINAL BLOCK	PUR	1
8	DUCT	DUCT	PUR	1
9	E	EARTH BUS BAR	PUR	1
10	TR2	TRANS	PUR	1
11	RF3	RECTIFIER	PUR	1

REV	DATE	DESCRIPTION	DRAWN	CHECK	APPRVD
A	05.AUG.2016	REDRAWING	K.H.Han	-	-

TITLE
TRAVERSING PANEL LAYOUT (INVERTER)
KD2M-15T

CUSTOMER

극동호이스트 주식회사
KUKDONG HOIST CO., LTD.

DESIGN	SCALE	SHT. NO.	ORDER NO.

DWG. NO.

98

TRAVERSING MOTION

POWER CIRCUIT DIAGRAM

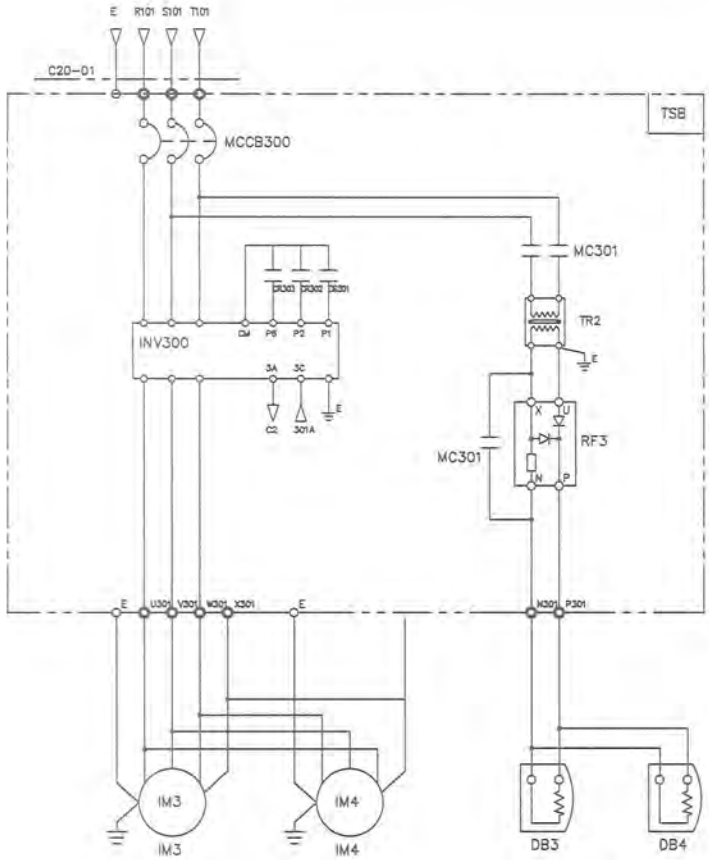

TRAVERSING MOTOR

DC MAG. BRAKE

CONTROL CIRCUIT DIAGRAM

BRAKE | EAST | WEST | HIGH SPEED

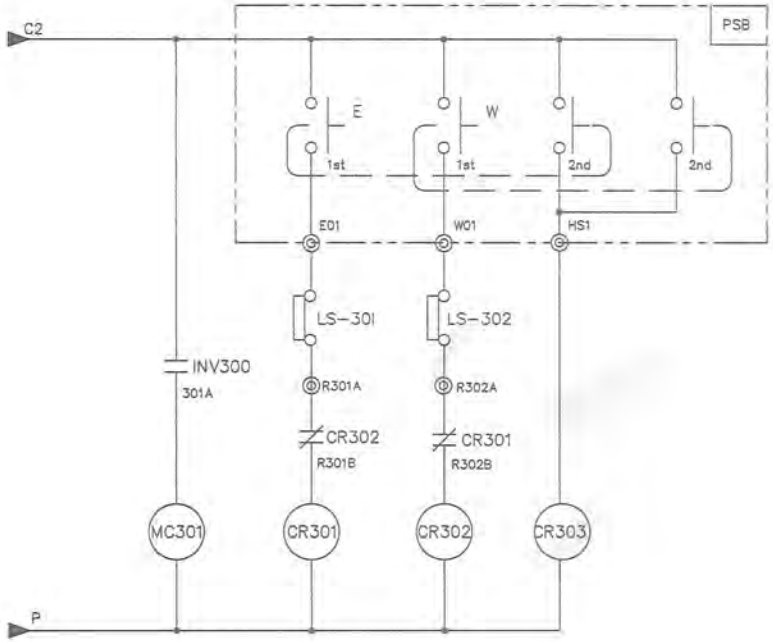

SPECIFICATION / SYMBOLS / DESCRIPTION	TRAVERSING POWER	TRAVERSING MOTOR	DC.MAG' BRAKE	NO FUSE BREAKER	TRANSFORMER	BRAKE MAGNET	CONTROL RELAY	INVERTER	SILICON RECTIFIER	CABLE
		IM 3,4	DB3,4	MCCB300	TR 2	MC301	CR301,302,303	INV300	RF3	C20-02
	AC 3PH 220V 60Hz	1.5KW x 4P (0.6kw x 8P)	DC 100V	ABE-33b/15AT	–	DMC22b	MINI 4a4b	SV037iG5A-2(SV022iG5A-2)	SR-30	VCT 4sq x 4C
	AC 3PH 380(440,460,480)V 60Hz	1.5KW x 4P (0.6kw x 8P)	DC 100V	ABE-33b/10AT	380(440,460,480)/220V,300VA	DMC22b	MINI 4a4b	SV037iG5A-4(SV022iG5A-4)	SR-30	VCT 2.5sq x 4C
SELECTION / MAKER	KUK DONG HOIST			LS		DONG A		LS	ASAN	SEOUL

REV	DATE	DESCRIPTION	DRAWN	CHECK	APPRVD
A	05 AUG 2016	REDRAWING	K.H Han	-	-

TITLE: T/S POWER & CONTROL CIRCUIT DIAGRAM

KD2M-15T

CUSTOMER:

극동호이스트 주식회사
KUKDONG HOIST CO., LTD.

DESIGN	SCALE	SHT. NO.	ORDER NO.

DWG. NO.

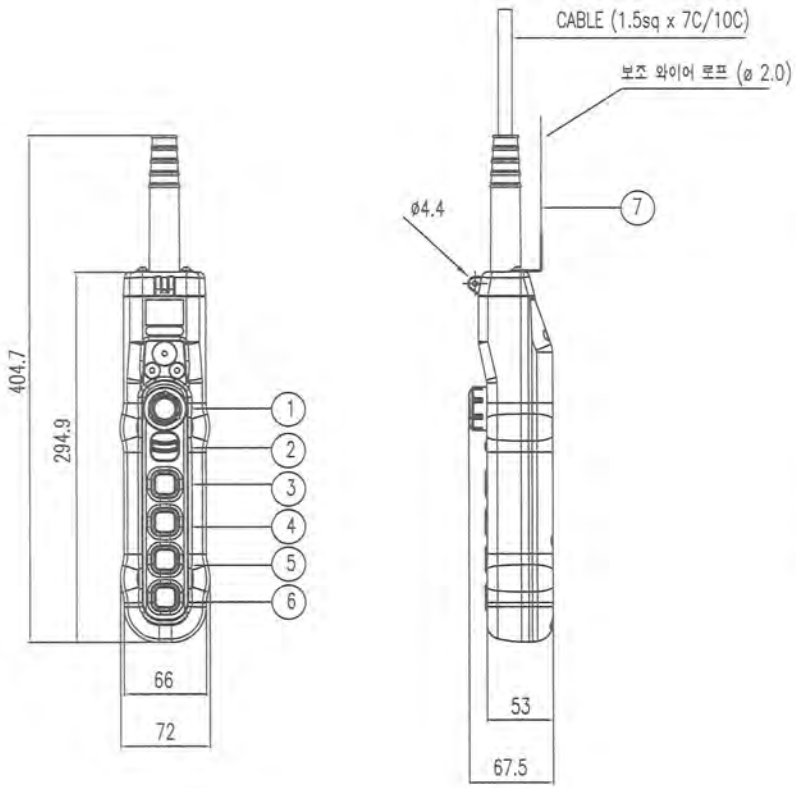

구분 / 색상	조작버튼	표시등
적색	비상	비상
황색	비정상	비정상
녹색	정상	정상
청색	의무	의무
흰색,회색-흑색	지정된의미없음	기타

* MATERIAL : POLYCARBOBATE(PLASTIC)
* BODY COLOR : YELLOW, BLACK
* IP : 55 이상

NO	SYMBOL	TYPE	SPEC.	COLOR
1	E.B.S	PUSH LOCK TURN RESET TYPE	250VAC x 6A	RED
2	SPARE			BLACK
3	상	1PUSH BUTTON 1STEP (2STEP)		
4	하	1PUSH BUTTON 1STEP (2STEP)		
5	동(전)	1PUSH BUTTON 1STEP (2STEP)		
6	서(후)	1PUSH BUTTON 1STEP (2STEP)		
7	보조 와이어	ø 2.0		

REV	DATE	DESCRIPTION	DRAWN	CHECK	APPRVD
A	05.AUG.2016	REDRAWING	K.H.Han	-	-

TITLE
PENDANT PUSH BUTTON SWITCH
LAY OUT

CUSTOMER

극동호이스트 주식회사
KUKDONG HOIST CO., LTD.

DESIGN	SCALE	SHT. NO.	ORDER NO.

DWG. NO.

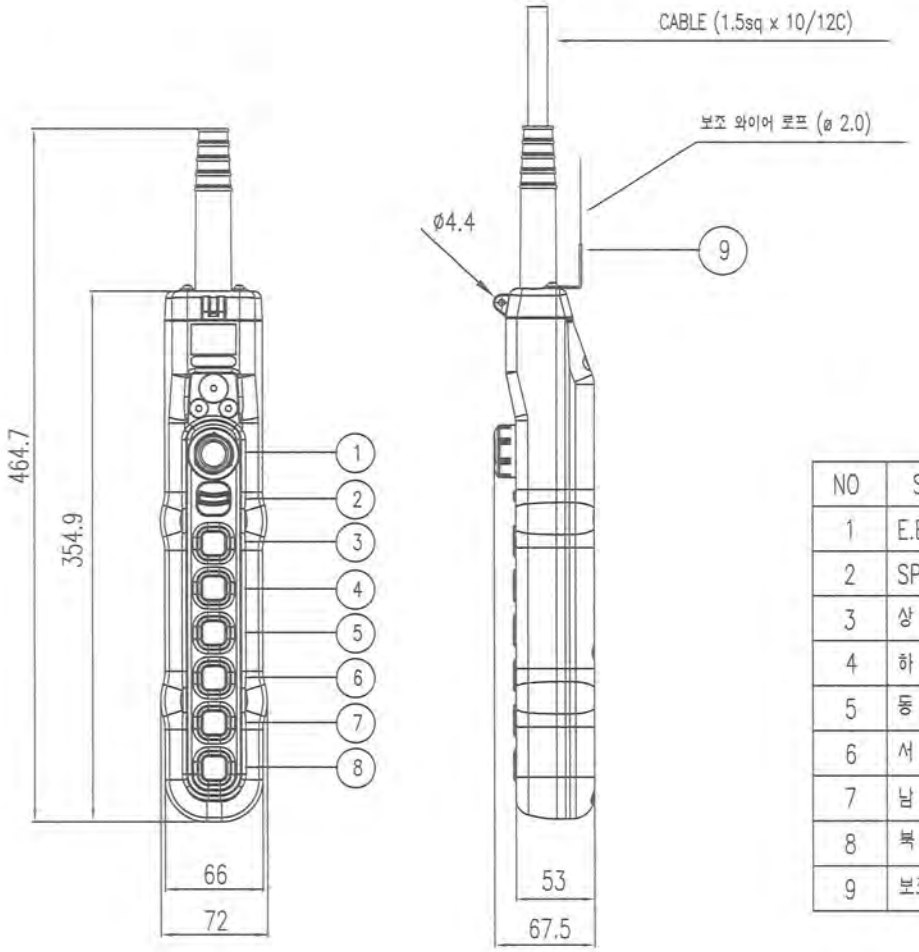

구분 / 색상	조작버튼	표시등
적색	비상	비상
황색	비정상	비정상
녹색	정상	정상
청색	의무	의무
흰색,회색-흑색	지정된의미없음	기타

* MATERIAL : POLYCARBOBATE(PLASTIC)
* BODY COLOR : YELLOW, BLACK
* IP : 55 이상

NO	SYMBOL	TYPE	SPEC.	COLOR
1	E.B.S	PUSH LOCK TURN RESET TYPE	250VAC x 6A	RED
2	SPARE			BLACK
3	상	1PUSH BUTTON 1STEP (2STEP)		
4	하	1PUSH BUTTON 1STEP (2STEP)		
5	동 (좌)	1PUSH BUTTON 1STEP (2STEP)		
6	서 (우)	1PUSH BUTTON 1STEP (2STEP)		
7	남 (전)	1PUSH BUTTON 1STEP		
8	북 (후)	1PUSH BUTTON 1STEP		
9	보조 WIRE	ø 2.0		

REV	DATE	DESCRIPTION	DRAWN	CHECK	APPRVD
	05.AUG.2016	REDRAWING	K.H.Han	-	-

TITLE: PENDANT PUSH BUTTON SWITCH
LAY OUT

CUSTOMER

극동호이스트 주식회사
KUKDONG HOIST CO., LTD.

DESIGN	SCALE	SHT. NO.	ORDER NO.

DWG. NO.

불법복제 및 배포금지

REFERENCE

심사필
한국승강기안전공단

▣ I-BEAM 최대지지거리

☞ 최대지지거리 판정결과

I-BEAM 규격	최대 지지거리 (cm)	처짐량 판정1 > 800	처짐량 판정2 >1000	굽힘응력(kg/㎠) < 1159
300×150×t8/13	140	2977.9	2985.6	1125.9
300×150×t10/18.5	190	2161.3	2171.6	1136.6
300×150×t11.5/22	210	2044.9	2057.6	1090.5
350×150×t9/15	190	2588	2599	1124.7
350×150×t12/24	280	1747.3	1763.6	1129.1
400×150×t10/18	260	2185	2200.6	1135.7
400×150×t12.5/25	340	1671.8	1692.7	1133.3
450×175×t11/20	370	1744.8	1767.5	1132.1
450×175×t13/26	460	1395.3	1423.6	1137.6
600×190×t13/25	640	1383.6	1428.6	1138.1
600×190×t16/35	820	1130.9	1193.4	1134.4

☞ 기본 조건

정격하중 (Kg)	양정 (m)	권상속도 (m/min)	호이스트		작업계수	풍력계수
			자중 (Kg)	풍압면적 (㎡)		
15000	30	2.3	1330	1.9	1.08	1.2

*첨부 강도계산서 참조

[I-BEAM 최대 지지거리 강도계산서]

1. 굽힘 MOMENT 계산

1-1. 수직하중에 의한 굽힘 MOMENT

빔 자중에 의한 MOMENT : $Ms = \dfrac{\phi \times \text{BEAM자중(등분포하중)} \times \text{지지거리}}{8}$ (kg · cm)

※ 작업계수(φ) = 1.08
※ BEAM 자중 (kg) = BEAM 단위중량(kg/cm) x 지지거리(cm)

이동하중에 의한 MOMENT : $Md = \dfrac{\phi \times \Psi \times \text{이동하중} \times \text{지지거리}}{4}$ (kg · cm)

※ 이동하중 (kg) = 정격하중 + 호이스트 자중
= 15000 + 1330 = 16330 (kg)

※ 충격계수(Ψ) = 1 + 0.6V (단, Ψ <1.1 이면 Ψ = 1.1, Ψ > 1.6 이면 Ψ = 1.6 으로 한다.
= 1 + (0.6 x 0.038) = 1.0228 ——> 1.1

※ 권상속도(V) = $\dfrac{2.3}{60}$ (m/min) = 0.038 (m/sec)

수직하중에 의한 굽힘 MOMENT : ΣMv = Ms + Md

1-2. 풍하중에 의한 굽힘 MOMENT

풍하중에 의한 MOMENT : $Mw = \dfrac{\text{풍하중(W)} \times \text{지지거리}}{2}$

※풍하중 (W) = 속도압(q) x 풍력계수 x 풍압을 받는 면적 (A) (kg)
※속도압(q) : = 8.5 x $\sqrt[4]{h}$ = 19.9 (h= 양정: 30)
※풍력계수(C) = 1.2 (크레인 제작기준 참조)
※풍압을 받는 면적 (A) = I-BEAM의 풍압면적 + HOIST의 풍압면적 (㎡)
※HOIST의 풍압 면적 ≒ 1.9 (㎡)

2. 굽힘 응력 계산

2-1. 수직하중에 의한 굽힘 응력

$\sigma v = \dfrac{\text{수직하중에 의한 굽힘MOMENT} : \Sigma Mv}{\text{단면 계수} : Zx}$ (kg/㎠)

2-2. 풍하중에 의한 굽힘 응력

$\sigma w = \dfrac{\text{풍하중에 의한 굽힘 MOMENT} : Mw}{\text{단면계수} : Zy}$ (kg/㎠)

2-3. 수직하중 및 풍하중에 의한 굽힘 응력

$\Sigma \sigma = \sigma v + \sigma w$

표1. I-BEAM 최대지지거리에 따른 굽힘응력 계산 결과

I-BEAM 규격	최대지지거리(cm)	I-BEAM		단면계수		Ms	Md	ΣMv	I-BEAM 풍압면적 (㎡)	W (kg)	Mw (kg · cm)	σv (kg/㎠)	σw (kg/㎠)
		단위중량 (kg/cm)	자중 (kg)	Zx (㎤)	Zy (㎤)	(kg · cm)	(kg · cm)	(kg · cm)					
300×150×t8/13	140	0.483	67.62	632	78.4	1278.02	679001.40	680279.42	0.42	55.40	3878.11	1076.39	49.47
300×150×t10/18.5	190	0.655	124.45	849	118	3192.14	921501.90	924694.04	0.57	58.98	5603.44	1089.16	47.49
300×150×t11.5/22	210	0.768	161.28	978	143	4572.29	1018502.10	1023074.39	0.63	60.42	6343.72	1046.09	44.36
350×150×t9/15	190	0.585	111.15	870	93.5	2851.00	921501.90	924352.90	0.67	61.25	5818.96	1062.47	62.23
350×150×t12/24	280	0.872	244.16	1280	158	9229.25	1358002.80	1367232.05	0.98	68.77	9628.42	1068.15	60.94
400×150×t10/18	260	0.72	187.2	1200	115	6570.72	1261002.60	1267573.32	1.04	70.21	9126.94	1056.31	79.36
400×150×t12.5/25	340	0.958	325.72	1580	165	14950.55	1649003.40	1663953.95	1.36	77.85	13234.30	1053.14	80.21
450×175×t11/20	370	0.917	339.29	1740	173	16947.54	1794503.70	1811451.24	1.67	85.13	15749.46	1041.06	91.04
450×175×t13/26	460	1.15	529	2170	231	32850.90	2231004.60	2263855.50	2.07	94.80	21804.83	1043.25	94.39
600×190×t13/25	640	1.33	851.2	3280	259	73543.68	3104006.40	3177550.08	3.84	137.07	43862.78	968.77	169.35
600×190×t16/35	820	1.76	1443.2	4330	373	159762.24	3977008.20	4136770.44	4.92	162.86	66773.26	955.37	179.02

[I-BEAM의 처짐량(Deflection) 및 최대굽힘응력 판정 결과]

1. 처짐량 판정 1
   판정기준: $L / \sigma > 800$
   ※ $\sigma = \sigma_s + \sigma_d$

2. 처짐량 판정 2
   판정기준: $L / \sigma_d > 1000$

3. 최대굽힘응력 판정
   판정기준: $\Sigma\sigma \leq 1159$ (kg/㎠) (= SS400 허용굽힘응력 1449 x 0.8)
   ※ $\Sigma\sigma = \sigma_v + \sigma_w$

※I-BEAM 자중에 의한 처짐(σs)

$$\sigma_s = \frac{5 \times \text{I-Beam자중} \times \text{지지거리}^3}{384 \times E \times Ix}$$

※이동하중에 의한 처짐(σd)

$$\sigma_d = \frac{(\text{정격하중} + \text{호이스트 자중}) \times \text{지지거리}^3}{48 \times E \times Ix}$$

E = 종탄성계수 (2,100,000 kg/㎠)
Ix = 단면2차MOMENT

					판정기준		
					> 800	> 1000	≤ 1159
I-BEAM 규격	Ix (㎝⁴)	최대지지거리(㎝)	σs (㎝)	σd (㎝)	처짐량판정1	처짐량판정2	Σσ (kg/㎠)
300×150×t8/13	9480	140	0.0001	0.0469	2977.9	2985.6	1125.9
300×150×t10/18.5	12700	190	0.0004	0.0875	2161.3	2171.6	1136.6
300×150×t11.5/22	14700	210	0.0006	0.1021	2044.9	2057.6	1090.5
350×150×t9/15	15200	190	0.0003	0.0731	2588	2599	1124.7
350×150×t12/24	22400	280	0.0015	0.1588	1747.3	1763.6	1129.1
400×150×t10/18	24100	260	0.0008	0.1181	2185	2200.6	1135.7
400×150×t12.5/25	31700	340	0.0025	0.2009	1671.8	1692.7	1133.3
450×175×t11/20	39200	370	0.0027	0.2093	1744.8	1767.5	1132.1
450×175×t13/26	48800	460	0.0065	0.3231	1395.3	1423.6	1137.6
600×190×t13/25	94800	640	0.0146	0.4480	1383.6	1428.6	1138.1
600×190×t16/35	130000	820	0.0380	0.6871	1130.9	1193.4	1134.4

불법복제 및 배포금지

▣ I-BEAM의 고정방법 및 사양

1. I-BEAM의 고정방법

용접구조	BOLT 체결구조	복합구조
	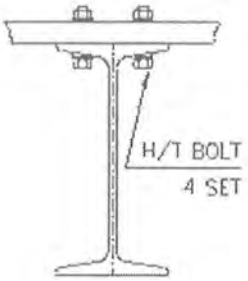	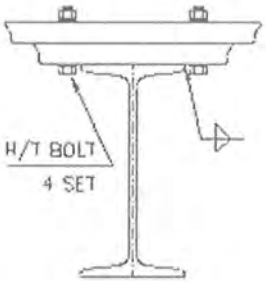

2. 기본조건 및 사양

* 용접이음의 허용응력(필렛용접 효율 포함) : 560kg/㎠
* 필렛 용접효율 : 80%
* H/T BOLT의 허용 인장응력 : 2,500kg/㎠

단위: mm

정격하중(Kg)	용접구조		BOLT 체결구조
	최소 용접두께	최소 용접길이	최소 BOLT SIZE
15000	7	380	M24 x 4set

단, 적용 I-BEAM 600×190×t16/35 의 경우임

※강도계산서 참조

[I-BEAM 고정볼트 강도 및 용접강도 계산서]

1) I-BEAM 고정방법중 BOLT구조의 강도 계산
[H/T BOLT의 허용인장응력 : 2500 kg/㎠]

☞ 작용하중 계산

$P = \Psi \times (Q+Q1) + \phi \times Q2$

충격계수 Ψ =	1.1
작업계수 φ =	1.08
정격하중 Q =	15000
HOIST자중 Q1 =	1330

☞ BOLT 1 개당 인장강도 계산

$$\sigma = \frac{P}{A} = 4 \times \frac{P}{(\pi \times d2 \times z)}$$

※ 판정기준: $\sigma < 2500$ kg/㎠

BEAM 규격	BEAM자중 (kg)	하중 P(kg)	BOLT 규격	BOLT수	BOLT 단면적 (㎠)	BOLT강도
300×150×t8/13	67.62	18036	M20	4	3.14	1436
300×150×t10/18.5	124.45	18097.4	M20	4	3.14	1440.9
300×150×t11.5/22	161.28	18137.2	M20	4	3.14	1444
350×150×t9/15	111.15	18083	M20	4	3.14	1439.7
350×150×t12/24	244.16	18226.7	M20	4	3.14	1451.2
400×150×t10/18	187.2	18165.2	M20	4	3.14	1446.3
400×150×t12.5/25	325.72	18314.8	M20	4	3.14	1458.2
450×175×t11/20	339.29	18329.4	M20	4	3.14	1459.3
450×175×t13/26	529	18534.3	M20	4	3.14	1475.7
600×190×t13/25	851.2	18882.3	M24	4	4.52	1044.4
600×190×t16/35	1443.2	19521.7	M24	4	4.52	1079.7

불법복제 및 배포금지

2) I-BEAM 고정방법중 용접구조의 강도 계산
[용접이음의 허용응력: 560 kg/㎠]

☞ 용접강도 계산

$$\sigma w = \frac{P}{0.707 x t x 2 x l} \quad kg/㎠$$

※ 판정기준: σw < 560 kg/㎠

BEAM 규격	하중 P(kg)	용접두께 t(㎝)	용접길이 l(㎝)	용접강도 σw(kg/㎠)
300×150×t8/13	18036	0.8	30	531.5
300×150×t10/18.5	18097.4	0.8	30	533.3
300×150×t11.5/22	18137.2	0.8	30	534.5
350×150×t9/15	18083	0.8	30	532.9
350×150×t12/24	18226.7	0.8	30	537.1
400×150×t10/18	18165.2	0.8	30	535.3
400×150×t12.5/25	18314.8	0.8	30	539.7
450×175×t11/20	18329.4	0.7	35	529.1
450×175×t13/26	18534.3	0.7	35	535
600×190×t13/25	18882.3	0.7	38	502
600×190×t16/35	19521.7	0.7	38	519

불법복제 및 배포금지

I-BEAM 계산서

심사필
한국승강기안전공단

불법복제 및 배포금지

제 2012-BJ-0008 호

안 전 인 증 서

정호엔지니어링

경기도 광명시 노동사동 440-5

위 사업장에서 제조하는 아래의 품목이 산업안전보건법 제34조 및 같은 법 시행규칙 제58조의4제4항에 따른 안전인증 심사 결과 안전 · 보건기준에 적합하므로 안전인증표시의 사용을 인증합니다.

품 목

양중기용 과부하방지장치

형식 · 모델/용량 · 등급/인증번호

형식·모델	용량·등급	인증번호
JDLS-70	J-2	12-AV2BJ-0008

인 증 기 준

방호장치 의무안전인증 고시(고용노동부고시 제2010-36호)

인 증 조 건

아래 주소에서 생산되는 제품에 한함.

정호엔지니어링, 경기도 광명시 노동사동 440-5

2012년 06월 11일

한국산업안전보건공단 이사장

▣ 과부하 방지장치 전류 조정 기준치

1. 내부 조작반의 전류 조정버튼으로 설정한다.

2. 전류 설정범위 도표

구 분	전동기 용량	범위	공급전압 별 전류 설정값	
			공급전압[V]	전류 설정값[A]
권 상	3.3[Kw] x 4P	100%	220V	13.0
			380V	7.53
			440V	6.50
			460V	6.0
			480V	5.96
		110%	220V	14.3
			380V	8.28
			440V	7.15
			460V	6.60
			480V	6.56

3. 과부하 방지장치의 전류설정은 하중110%에 대한 전류 값을 전류 조정버튼으로 조정한다.
4. 상기 정격전류는 극동제품에 맞게 설정되어 있으며, 공장내부의 전압 및 전류는 변동이 발생될 수 있기 때문에 정격전류의 설정치는 약간의 변동이 발생될 수도 있음. 또한, 전동기의 제조 특성상 ±5%범위의 오차 가능성도 있음.

■ 배선용 차단기의 정격전류 용량 계산

♠ 규격 : 차단기의 차단용량이 해당 전동기 등의 정격전류에 대하여 250% 이하일 것.
(안전인증 절차 및 안전인증 기준 55항목 전기관계)

◆ $I_B \leq 2.5 \times (I_M + I_L)$

I_B : 배선용 차단기의 정격전류

I_M : 전동기 정격전류

I_L : 전동기 이외의 부하전류

부품 \ 전압		220V	380V	440V	460V	480V
15 TON (2 x 3.3kw x 4p)	권상 전동기	13.0	7.53	6.5	6.0	5.96
	횡행 전동기	7.3	4.2	3.7	3.5	3.4
	CONTROL	2	1	1	1	1
합 계		42.6	24.46	21.4	20	19.7
배선용 차단기 적용 계산값		106.5	61.15	53.5	50	49.25
배선용 차단기 적용 용량		60AF/60AT	50AF/40AT	30AF/30AT	30AF/30AT	30AF/30AT

불법복제 및 배포금지

◆ DATA SHEET OF MOTOR ◆

1	APPLICATION : HOISTING MOTOR			2	MOTOR TYPE : SQUIRREL CAGE INDUCTION MOTOR		
3	OUTPUT : 3.3 [kw]			4	POLES : 4		
5	SPEED : 1740 [rpm]			6	INSULATION CLASS : F		
7	STARTING METHOD : ACROSS THE LINE STARTER (FULL VOLTAGE)			8	RATING : 30 [min]		
9	POWER SUPPLY	AC 3Φ 220V 380V 440V 460V 480V 60Hz		10	NO LOAD CURRENT [A]	220V	7.1
						380V	4.11
						440V	3.55
						460V	3.4
						480V	3.25
11	FULL LOAD CURRENT [A]	220V	13.0	12	STARTING CURRENT [A]	220V	55.3
		380V	7.53			380V	32.02
		440V	6.50			440V	27.65
		460V	6.00			460V	26.45
		480V	5.96			480V	25.35
13	WINDING CONNECTION	220V	DELTA	14	MINIMUM STARTING VOLTAGE [V]	220V	198
		380V	STAR			380V	342
		440V	STAR			440V	396
		460V	STAR			460V	414
		480V	STAR			480V	432
15	EFFICIENCY : 82.8 [%]			16	POWER FACTOR : 77.7 [%]		
17	FULL LOAD TORQUE : 1.84 [kg · m]			18	STARTING TORQUE : 279 [%]		
19	BEARING : OPL – 6009Z , PL – 6206Z			20	NOISE LEVEL : 65 [dB]		
21	PAINTING COLOR : 0.4PB 4.2/5.6			22	ROTATION : CCW & CW		
23	ENCLOSURE : TENV			24	NET WEIGHT : 30.7 [kg]		
25	BEARING LUBRICATION : GREASE			26	LOCATION : OUT DOOR		
27	TEMPERATURE RISE AT FULL LOAD : BY RESISTOR METHOD : 90 [℃]						

불법복제 및 배포금지

THREE PHASE INDUCTION MOTOR DATA SHEET

SCHEDULE OF TECHNICAL DATA

1. SERVICE	TRAVERSING
2. MANUFACTURE	극동호이스트 (주)
3. FRAME NUMBER	90 L
4. RATED POWER	1.5 KW x 4 P
5. RATED VOLTAGE AND FREQUENCY	220 V 60 Hz
6. MOTOR TYPE	SQUIRREL CAGE ROTOR TYPE
7. SERVICE FACTOR AND RATTING	1 . 0 , 30 MIN
8. LOCATION AND INSULATION CLASS	INDOOR, OUTDOOR, B CLASS
9. DESIGN TEMPERATURE RISE(BY RESISTANCE)	80 ℃
10. FULL LOAD SPEED	1710 RPM
11. FULL LOAD CURRENT	7.3 A
12. STARTING CURRENT AT RATED VOLTAGE	42.0 A
13. MINIMUM STARTING VOLTAGE	200 V
14. EFFICIENCY AT 100% RATED LOAD	73.0 %
15. POWER FACTOR AT 100% RATED LOAD	75.0 %
16. STARTING TORQUE	1.72 KG.M
17. SITE ALTITUDE(UNDER)	1000 M
18. ENCLOSURE & COOLING METHOD	T E N V
19. TYPE OF BEARING	PL : 6205zz OPL : 6204zz
20. MOUNTING	H O R I Z O N T A L
21. MAXIMUM AMBIENT TEMPERATURE	40 ℃
22. BEARING LUBRICATION	G R E A S E
23. STARTING METHOD	F U L L V O L T A G E

불법복제 및 배포금지

THREE PHASE INDUCTION MOTOR DATA SHEET

SCHEDULE OF TECHNICAL DATA

1. SERVICE	TRAVERSING
2. MANUFACTURE	극동호이스트 (주)
3. FRAME NUMBER	90 L
4. RATED POWER	1.5 KW x 4 P
5. RATED VOLTAGE AND FREQUENCY	380 V 60 Hz
6. MOTOR TYPE	SQUIRREL CAGE ROTOR TYPE
7. SERVICE FACTOR AND RATTING	1 . 0 , 30 MIN
8. LOCATION AND INSULATION CLASS	INDOOR, OUTDOOR, B CLASS
9. DESIGN TEMPERATURE RISE(BY RESISTANCE)	80 ℃
10. FULL LOAD SPEED	1710 RPM
11. FULL LOAD CURRENT	4.2 A
12. STARTING CURRENT AT RATED VOLTAGE	24.2 A
13. MINIMUM STARTING VOLTAGE	345 V
14. EFFICIENCY AT 100% RATED LOAD	73.0 %
15. POWER FACTOR AT 100% RATED LOAD	75.0 %
16. STARTING TORQUE	1.72 KG.M
17. SITE ALTITUDE(UNDER)	1000 M
18. ENCLOSURE & COOLING METHOD	T E N V
19. TYPE OF BEARING	PL : 6205zz OPL : 6204zz
20. MOUNTING	H O R I Z O N T A L
21. MAXIMUM AMBIENT TEMPERATURE	40 ℃
22. BEARING LUBRICATION	G R E A S E
23. STARTING METHOD	F U L L V O L T A G E

불법복제 및 배포금지

THREE PHASE INDUCTION MOTOR DATA SHEET

SCHEDULE OF TECHNICAL DATA

1. SERVICE	TRAVERSING
2. MANUFACTURE	극동호이스트 (주)
3. FRAME NUMBER	90 L
4. RATED POWER	1.5 KW x 4 P
5. RATED VOLTAGE AND FREQUENCY	440 V 60 Hz
6. MOTOR TYPE	SQUIRREL CAGE ROTOR TYPE
7. SERVICE FACTOR AND RATTING	1 . 0 , 30 MIN
8. LOCATION AND INSULATION CLASS	INDOOR, OUTDOOR, B CLASS
9. DESIGN TEMPERATURE RISE(BY RESISTANCE)	80 ℃
10. FULL LOAD SPEED	1710 RPM
11. FULL LOAD CURRENT	3.7A
12. STARTING CURRENT AT RATED VOLTAGE	21.0 A
13. MINIMUM STARTING VOLTAGE	400 V
14. EFFICIENCY AT 100% RATED LOAD	73.0 %
15. POWER FACTOR AT 100% RATED LOAD	75.0 %
16. STARTING TORQUE	1.72 KG.M
17. SITE ALTITUDE(UNDER)	1000 M
18. ENCLOSURE & COOLING METHOD	T E N V
19. TYPE OF BEARING	PL : 6205zz OPL : 6204zz
20. MOUNTING	H O R I Z O N T A L
21. MAXIMUM AMBIENT TEMPERATURE	40 ℃
22. BEARING LUBRICATION	G R E A S E
23. STARTING METHOD	F U L L V O L T A G E

불법복제 및 배포금지

THREE PHASE INDUCTION MOTOR DATA SHEET

SCHEDULE OF TECHNICAL DATA

1. SERVICE	TRAVERSING
2. MANUFACTURE	극동호이스트 (주)
3. FRAME NUMBER	90 L
4. RATED POWER	1.5 KW x 4 P
5. RATED VOLTAGE AND FREQUENCY	460 V 60 Hz
6. MOTOR TYPE	SQUIRREL CAGE ROTOR TYPE
7. SERVICE FACTOR AND RATTING	1 . 0 , 30 MIN
8. LOCATION AND INSULATION CLASS	INDOOR, OUTDOOR, B CLASS
9. DESIGN TEMPERATURE RISE(BY RESISTANCE)	80 ℃
10. FULL LOAD SPEED	1710 RPM
11. FULL LOAD CURRENT	3.5A
12. STARTING CURRENT AT RATED VOLTAGE	20.8 A
13. MINIMUM STARTING VOLTAGE	418 V
14. EFFICIENCY AT 100% RATED LOAD	73.0 %
15. POWER FACTOR AT 100% RATED LOAD	75.0 %
16. STARTING TORQUE	1.72 KG.M
17. SITE ALTITUDE(UNDER)	1000 M
18. ENCLOSURE & COOLING METHOD	T E N V
19. TYPE OF BEARING	PL : 6205zz OPL : 6204zz
20. MOUNTING	H O R I Z O N T A L
21. MAXIMUM AMBIENT TEMPERATURE	40 ℃
22. BEARING LUBRICATION	G R E A S E
23. STARTING METHOD	F U L L V O L T A G E

불법복제 및 배포금지

THREE PHASE INDUCTION MOTOR DATA SHEET

SCHEDULE OF TECHNICAL DATA

1. SERVICE	TRAVERSING
2. MANUFACTURE	극동호이스트 (주)
3. FRAME NUMBER	90 L
4. RATED POWER	1.5 KW x 4 P
5. RATED VOLTAGE AND FREQUENCY	480 V 60 Hz
6. MOTOR TYPE	SQUIRREL CAGE ROTOR TYPE
7. SERVICE FACTOR AND RATTING	1 . 0 , 30 MIN
8. LOCATION AND INSULATION CLASS	INDOOR, OUTDOOR, B CLASS
9. DESIGN TEMPERATURE RISE(BY RESISTANCE)	80 ℃
10. FULL LOAD SPEED	1710 RPM
11. FULL LOAD CURRENT	3.4A
12. STARTING CURRENT AT RATED VOLTAGE	20.0 A
13. MINIMUM STARTING VOLTAGE	436 V
14. EFFICIENCY AT 100% RATED LOAD	73.0 %
15. POWER FACTOR AT 100% RATED LOAD	75.0 %
16. STARTING TORQUE	1.72 KG.M
17. SITE ALTITUDE(UNDER)	1000 M
18. ENCLOSURE & COOLING METHOD	T E N V
19. TYPE OF BEARING	PL : 6205zz OPL : 6204zz
20. MOUNTING	H O R I Z O N T A L
21. MAXIMUM AMBIENT TEMPERATURE	40 ℃
22. BEARING LUBRICATION	G R E A S E
23. STARTING METHOD	F U L L V O L T A G E

불법복제 및 배포금지

THREE PHASE INDUCTION MOTOR DATA SHEET

SCHEDULE OF TECHNICAL DATA

1. SERVICE	TRAVERSING
2. MANUFACTURE	극동 호이스트 (주)
3. FRAME NUMBER	90 L
4. RATED POWER	0.6 KW x 8 P
5. RATED VOLTAGE AND FREQUENCY	220 V 60 Hz
6. MOTOR TYPE	SQUIRREL CAGE ROTOR TYPE
7. SERVICE FACTOR AND RATTING	1 . 0 , 30 MIN
8. LOCATION AND INSULATION CLASS	INDOOR, OUTDOOR, B CLASS
9. DESIGN TEMPERATURE RISE(BY RESISTANCE)	80 ℃
10. FULL LOAD SPEED	800 RPM
11. FULL LOAD CURRENT	5.1 A
12. STARTING CURRENT AT RATED VOLTAGE	21.8 A
13. MINIMUM STARTING VOLTAGE	200 V
14. EFFICIENCY AT 100% RATED LOAD	64.0 %
15. POWER FACTOR AT 100% RATED LOAD	44.0 %
16. STARTING TORQUE	1.33 KG.M
17. SITE ALTITUDE(UNDER)	1000 M
18. ENCLOSURE & COOLING METHOD	T E N V
19. TYPE OF BEARING	PL : 6205zz OPL : 6204zz
20. MOUNTING	H O R I Z O N T A L
21. MAXIMUM AMBIENT TEMPERATURE	40 ℃
22. BEARING LUBRICATION	G R E A S E
23. STARTING METHOD	F U L L V O L T A G E

불법복제 및 배포금지

THREE PHASE INDUCTION MOTOR DATA SHEET

SCHEDULE OF TECHNICAL DATA

1. SERVICE	TRAVERSING
2. MANUFACTURE	극동 호이스트 (주)
3. FRAME NUMBER	90 L
4. RATED POWER	0.6 KW x 8 P
5. RATED VOLTAGE AND FREQUENCY	380 V 60 Hz
6. MOTOR TYPE	SQUIRREL CAGE ROTOR TYPE
7. SERVICE FACTOR AND RATTING	1 . 0 , 30 MIN
8. LOCATION AND INSULATION CLASS	INDOOR, OUTDOOR, B CLASS
9. DESIGN TEMPERATURE RISE(BY RESISTANCE)	80 ℃
10. FULL LOAD SPEED	800 RPM
11. FULL LOAD CURRENT	2.96 A
12. STARTING CURRENT AT RATED VOLTAGE	12.59 A
13. MINIMUM STARTING VOLTAGE	345 V
14. EFFICIENCY AT 100% RATED LOAD	64.0 %
15. POWER FACTOR AT 100% RATED LOAD	44.0 %
16. STARTING TORQUE	1.33 KG.M
17. SITE ALTITUDE(UNDER)	1000 M
18. ENCLOSURE & COOLING METHOD	T E N V
19. TYPE OF BEARING	PL : 6205zz OPL : 6204zz
20. MOUNTING	H O R I Z O N T A L
21. MAXIMUM AMBIENT TEMPERATURE	40 ℃
22. BEARING LUBRICATION	G R E A S E
23. STARTING METHOD	F U L L V O L T A G E

불법복제 및 배포금지

THREE PHASE INDUCTION MOTOR DATA SHEET

SCHEDULE OF TECHNICAL DATA

1. SERVICE	TRAVERSING
2. MANUFACTURE	극동 호이스트 (주)
3. FRAME NUMBER	90 L
4. RATED POWER	0.6 KW x 8 P
5. RATED VOLTAGE AND FREQUENCY	440 V 60 Hz
6. MOTOR TYPE	SQUIRREL CAGE ROTOR TYPE
7. SERVICE FACTOR AND RATTING	1 . 0 , 30 MIN
8. LOCATION AND INSULATION CLASS	INDOOR, OUTDOOR, B CLASS
9. DESIGN TEMPERATURE RISE(BY RESISTANCE)	80 ℃
10. FULL LOAD SPEED	800 RPM
11. FULL LOAD CURRENT	2.56 A
12. STARTING CURRENT AT RATED VOLTAGE	10.88 A
13. MINIMUM STARTING VOLTAGE	400 V
14. EFFICIENCY AT 100% RATED LOAD	64.0 %
15. POWER FACTOR AT 100% RATED LOAD	44.0 %
16. STARTING TORQUE	1.33 KG.M
17. SITE ALTITUDE(UNDER)	1000 M
18. ENCLOSURE & COOLING METHOD	T E N V
19. TYPE OF BEARING	PL : 6205zz OPL : 6204zz
20. MOUNTING	H O R I Z O N T A L
21. MAXIMUM AMBIENT TEMPERATURE	40 ℃
22. BEARING LUBRICATION	G R E A S E
23. STARTING METHOD	F U L L V O L T A G E

불법복제 및 배포금지

THREE PHASE INDUCTION MOTOR DATA SHEET

SCHEDULE OF TECHNICAL DATA

1. SERVICE	TRAVERSING
2. MANUFACTURE	극동 호이스트 (주)
3. FRAME NUMBER	90 L
4. RATED POWER	0.6 KW x 8 P
5. RATED VOLTAGE AND FREQUENCY	460 V 60 Hz
6. MOTOR TYPE	SQUIRREL CAGE ROTOR TYPE
7. SERVICE FACTOR AND RATTING	1 . 0 , 30 MIN
8. LOCATION AND INSULATION CLASS	INDOOR, OUTDOOR, B CLASS
9. DESIGN TEMPERATURE RISE(BY RESISTANCE)	80 ℃
10. FULL LOAD SPEED	800 RPM
11. FULL LOAD CURRENT	2.45 A
12. STARTING CURRENT AT RATED VOLTAGE	10.2 A
13. MINIMUM STARTING VOLTAGE	418 V
14. EFFICIENCY AT 100% RATED LOAD	64.0 %
15. POWER FACTOR AT 100% RATED LOAD	44.0 %
16. STARTING TORQUE	1.33 KG.M
17. SITE ALTITUDE(UNDER)	1000 M
18. ENCLOSURE & COOLING METHOD	T E N V
19. TYPE OF BEARING	PL : 6205zz OPL : 6204zz
20. MOUNTING	H O R I Z O N T A L
21. MAXIMUM AMBIENT TEMPERATURE	40 ℃
22. BEARING LUBRICATION	G R E A S E
23. STARTING METHOD	F U L L V O L T A G E

불법복제 및 배포금지

THREE PHASE INDUCTION MOTOR DATA SHEET

SCHEDULE OF TECHNICAL DATA

1. SERVICE	TRAVERSING
2. MANUFACTURE	극동 호이스트 (주)
3. FRAME NUMBER	90 L
4. RATED POWER	0.6 KW x 8 P
5. RATED VOLTAGE AND FREQUENCY	480 V 60 Hz
6. MOTOR TYPE	SQUIRREL CAGE ROTOR TYPE
7. SERVICE FACTOR AND RATTING	1 . 0 , 30 MIN
8. LOCATION AND INSULATION CLASS	INDOOR, OUTDOOR, B CLASS
9. DESIGN TEMPERATURE RISE(BY RESISTANCE)	80 ℃
10. FULL LOAD SPEED	800 RPM
11. FULL LOAD CURRENT	2.35 A
12. STARTING CURRENT AT RATED VOLTAGE	10.03 A
13. MINIMUM STARTING VOLTAGE	436 V
14. EFFICIENCY AT 100% RATED LOAD	64.0 %
15. POWER FACTOR AT 100% RATED LOAD	44.0 %
16. STARTING TORQUE	1.33 KG.M
17. SITE ALTITUDE(UNDER)	1000 M
18. ENCLOSURE & COOLING METHOD	T E N V
19. TYPE OF BEARING	PL : 6205zz OPL : 6204zz
20. MOUNTING	H O R I Z O N T A L
21. MAXIMUM AMBIENT TEMPERATURE	40 ℃
22. BEARING LUBRICATION	G R E A S E
23. STARTING METHOD	F U L L V O L T A G E

불법복제 및 배포금지

THREE PHASE INDUCTION MOTOR DATA SHEET

SCHEDULE OF TECHNICAL DATA

1. SERVICE	TRAVERSING
2. MANUFACTURE	극동호이스트(주)
3. FRAME NUMBER	112 S
4. RATED POWER	1.5/0.75 KW x 4/8 P
5. RATED VOLTAGE AND FREQUENCY	220 V 60 Hz
6. MOTOR TYPE	SQUIRREL CAGE ROTOR TYPE
7. SERVICE FACTOR AND RATTING	1 . 0 , 30 MIN
8. LOCATION AND INSULATION CLASS	INDOOR, OUTDOOR, B CLASS
9. DESIGN TEMPERATURE RISE(BY RESISTANCE)	80 ℃
10. FULL LOAD SPEED	1670/815 RPM
11. FULL LOAD CURRENT	7.2/6.2 A
12. STARTING CURRENT AT RATED VOLTAGE	35.6/21.7 A
13. MINIMUM STARTING VOLTAGE	200 V
14. EFFICIENCY AT 100% RATED LOAD	69.5/63 %
15. POWER FACTOR AT 100% RATED LOAD	74/50 %
16. STARTING TORQUE	1.48/1.22 KG.M
17. SITE ALTITUDE(UNDER)	1000 M
18. ENCLOSURE & COOLING METHOD	T E N V
19. TYPE OF BEARING	PL : 6206zz OPL : 6206zz
20. MOUNTING	H O R I Z O N T A L
21. MAXIMUM AMBIENT TEMPERATURE	40 ℃
22. BEARING LUBRICATION	G R E A S E
23. STARTING METHOD	F U L L V O L T A G E

불법복제 및 배포금지

THREE PHASE INDUCTION MOTOR DATA SHEET

SCHEDULE OF TECHNICAL DATA

1. SERVICE	TRAVERSING
2. MANUFACTURE	극동호이스트(주)
3. FRAME NUMBER	112 S
4. RATED POWER	1.5/0.75 KW x 4/8 P
5. RATED VOLTAGE AND FREQUENCY	380 V 60 Hz
6. MOTOR TYPE	SQUIRREL CAGE ROTOR TYPE
7. SERVICE FACTOR AND RATTING	1 . 0 , 30 MIN
8. LOCATION AND INSULATION CLASS	INDOOR, OUTDOOR, B CLASS
9. DESIGN TEMPERATURE RISE(BY RESISTANCE)	80 ℃
10. FULL LOAD SPEED	1670/815 RPM
11. FULL LOAD CURRENT	4.17/3.59 A
12. STARTING CURRENT AT RATED VOLTAGE	20.6/12.56 A
13. MINIMUM STARTING VOLTAGE	345 V
14. EFFICIENCY AT 100% RATED LOAD	69.5/63 %
15. POWER FACTOR AT 100% RATED LOAD	74/50 %
16. STARTING TORQUE	1.48/1.22 KG.M
17. SITE ALTITUDE(UNDER)	1000 M
18. ENCLOSURE & COOLING METHOD	T E N V
19. TYPE OF BEARING	PL : 6206zz OPL : 6206zz
20. MOUNTING	H O R I Z O N T A L
21. MAXIMUM AMBIENT TEMPERATURE	40 ℃
22. BEARING LUBRICATION	G R E A S E
23. STARTING METHOD	F U L L V O L T A G E

불법복제 및 배포금지

THREE PHASE INDUCTION MOTOR DATA SHEET

SCHEDULE OF TECHNICAL DATA

1. SERVICE	TRAVERSING
2. MANUFACTURE	극동호이스트(주)
3. FRAME NUMBER	112 S
4. RATED POWER	1.5/0.75 KW x 4/8 P
5. RATED VOLTAGE AND FREQUENCY	440 V 60 Hz
6. MOTOR TYPE	SQUIRREL CAGE ROTOR TYPE
7. SERVICE FACTOR AND RATTING	1 . 0 , 30 MIN
8. LOCATION AND INSULATION CLASS	INDOOR, OUTDOOR, B CLASS
9. DESIGN TEMPERATURE RISE(BY RESISTANCE)	80 ℃
10. FULL LOAD SPEED	1670/815 RPM
11. FULL LOAD CURRENT	3.6/3.1 A
12. STARTING CURRENT AT RATED VOLTAGE	17.8/10.85 A
13. MINIMUM STARTING VOLTAGE	400 V
14. EFFICIENCY AT 100% RATED LOAD	69.5/63 %
15. POWER FACTOR AT 100% RATED LOAD	74/50 %
16. STARTING TORQUE	1.48/1.22 KG.M
17. SITE ALTITUDE(UNDER)	1000 M
18. ENCLOSURE & COOLING METHOD	T E N V
19. TYPE OF BEARING	PL : 6206zz OPL : 6206zz
20. MOUNTING	H O R I Z O N T A L
21. MAXIMUM AMBIENT TEMPERATURE	40 ℃
22. BEARING LUBRICATION	G R E A S E
23. STARTING METHOD	F U L L V O L T A G E

불법복제 및 배포금지

THREE PHASE INDUCTION MOTOR DATA SHEET

SCHEDULE OF TECHNICAL DATA

1. SERVICE	TRAVERSING
2. MANUFACTURE	극동호이스트(주)
3. FRAME NUMBER	112 S
4. RATED POWER	1.5/0.75 KW x 4/8 P
5. RATED VOLTAGE AND FREQUENCY	460 V 60 Hz
6. MOTOR TYPE	SQUIRREL CAGE ROTOR TYPE
7. SERVICE FACTOR AND RATTING	1 . 0 , 30 MIN
8. LOCATION AND INSULATION CLASS	INDOOR, OUTDOOR, B CLASS
9. DESIGN TEMPERATURE RISE(BY RESISTANCE)	80 ℃
10. FULL LOAD SPEED	1700/815 RPM
11. FULL LOAD CURRENT	3.44/2.96 A
12. STARTING CURRENT AT RATED VOLTAGE	1670/815 RPM
13. MINIMUM STARTING VOLTAGE	418 V
14. EFFICIENCY AT 100% RATED LOAD	69.5/63 %
15. POWER FACTOR AT 100% RATED LOAD	74/50 %
16. STARTING TORQUE	1.48/1.22 KG.M
17. SITE ALTITUDE(UNDER)	1000 M
18. ENCLOSURE & COOLING METHOD	T E N V
19. TYPE OF BEARING	PL : 6206zz OPL : 6206zz
20. MOUNTING	H O R I Z O N T A L
21. MAXIMUM AMBIENT TEMPERATURE	40 ℃
22. BEARING LUBRICATION	G R E A S E
23. STARTING METHOD	F U L L V O L T A G E

불법복제 및 배포금지

THREE PHASE INDUCTION MOTOR DATA SHEET

SCHEDULE OF TECHNICAL DATA

1. SERVICE	TRAVERSING
2. MANUFACTURE	극동호이스트(주)
3. FRAME NUMBER	112 S
4. RATED POWER	1.5/0.75 KW x 4/8 P
5. RATED VOLTAGE AND FREQUENCY	480 V 60 Hz
6. MOTOR TYPE	SQUIRREL CAGE ROTOR TYPE
7. SERVICE FACTOR AND RATTING	1 . 0 , 30 MIN
8. LOCATION AND INSULATION CLASS	INDOOR, OUTDOOR, B CLASS
9. DESIGN TRMPERATURE RISE(BY RESISTANCE)	80 ℃
10. FULL LOAD SPEED	1670/815 RPM
11. FULL LOAD CURRENT	3.5/3.0 A
12. STARTING CURRENT AT RATED VOLTAGE	17.5/10.76 A
13. MINIMUM STARTING VOLTAGE	432 V
14. EFFICIENCY AT 100% RATED LOAD	69.5/63 %
15. POWER FACTOR AT 100% RATED LOAD	74/50 %
16. STARTING TORQUE	1.48/1.22 KG.M
17. SITE ALTTITUDE(UNDER)	1000 M
18. ENCLOSURE & COOLING METHOD	T E N V
19. TYPE OF BEARING	PL : 6206zz OPL : 6206zz
20. MOUNTING	H O R I Z O N T A L
21. MAXIMUM AMBIENT TEMPERATURE	40 ℃
22. BEARING LUBRICATION	G R E A S E
23. STARTING METHOD	F U L L V O L T A G E

불법복제 및 배포금지

CERTIFICATE OF INSPECTION AND TEST FOR LOAD CHAIN

KUK DONG HOIST Co., Ltd.
극동호이스트 주식회사

주 소 : 경기도 안산시 단원구 해봉로 119
T E L : 031-491-5311~4
F A X : 031-492-0473

MESSERS 납 품 처	아이케이티오	ORDER NO.			Test Certificate According to KS B 6278 GRADE-80
I T E M 품 명	LOAD CHAIN 11.2 Ø				
CERT No. 검사번호	KDQ-A-112				
Characteristics of the Chain 체 인 치 수	Diameter 선경(㎜)	Pitch 피치(㎜)	Width 외경너비(㎜)	Weight 중량(kg/M)	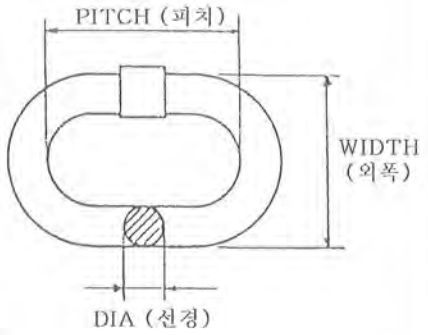
S P E C. 규 격	11.2	34.3	36.0	2.70	
Tolerance + 허용오차 −	0 0.1	0.2 0			
Measurement 측 정 치	11.2	34.3	36.0	2.70	

Material:	Welding Process(용접방법)	Heat Treatment
SAE15B24	Butt Resistance Welding	열처리 : Hv 600

Quantity 납품수량 LOT No.	Quantity 납품수량 M	Weight 중량(kg)	Safe Working 안전사용하중(kgf)	Proof Load 시험하중(kgf)	Breaking Load 파단하중(kgf) Min.16,000 kg	Elongation 연신율(%) 6%
−	92	−	4,000 kg	8,000 kg	19,100 kg	8.4 %

RESULT OF TEST

POSITIVE

TEST DATE : 2016. 01. 05
검 사 일 자
KUK DONG CO., LTD SIGNATURE OF TESTER
검사자 서명 : SEO SANG YEON

THIS TEST CERTIFICATE MUST BE KEPT FOR THREE YEARS RESP.
DURING THE ENTIRE SERVICE LIFE OF THE CHAIN.
본 시험 성적서는 체인의 작업수명인 3년간 보관되어야 합니다.

※ 로드 체인 사용 시 주의사항
1. 안전사용 하중을 초과하지 말 것.
2. 충격을 가하지 말 것.
3. 부식으로 부터 보호할 것.
4. 체인이 꼬이지 않도록 할 것.

KUK DONG HOIST Co., Ltd.